CRITICAL SYSTEM SOLUTIONS

PRODUCTS, APPLICATIONS, AND SERVICES FROM SEL

TABLE OF CONTENTS

Industries We Serve 2
SEL Overview. 3
SEL Commitment to Quality 4
The SEL Advantage. 6
SEL Safety 7
SEL Product Application Guide 8
Example Industrial Plant One-Line Diagram 10
Automation and Integration Overview 12
Example Industrial Automation Diagram. 14
Maximum Performance. Minimum Space.. 16
Generator Protection 18
Distribution Protection. 20
Motor Protection 22
SEL-849 Motor Management Relay. 24
Metering 26
Bus Protection. 28
Transformer Protection and Monitoring 30
Transmission and Subtransmission Protection 32
Breaker Failure and Capacitor Bank Protection. 34
Rotary Switches 36
I/O Processors and Controllers 38
Information Processors 40
Computing 42
Secure Communications 44
Fiber-Optic Devices 46
Precise Time 48
Annunciation and Notification 50
Software. 52
acSELerator QuickSet® SEL-5030 Software 54
acSELerator Team® SEL-5045 Software 56
Fault Indicators and Sensors. 58
Engineering Services 60
General Engineering Services. 60
Protection and Automation Services 61
Model Power System Testing. 62
Arc-Flash Hazard Services 63
powerMAX® Power Management and Control System 64
Custom Panel Solutions. 66
powerCORE® Substation Control Enclosure. 67
Order SEL Products Worldwide 68

TO DOWNLOAD A DIGITAL VERSION OF THIS CATALOG, VISIT WWW.SELINC.COM/INDUSTRIAL.

INDUSTRIES WE SERVE

At SEL, our more than 30 years of experience providing highly reliable, innovative solutions have made us a valued business partner for power management, process control, and factory automation. SEL products are designed to meet the rigorous environmental and operational demands of facilities that must operate flawlessly, 24 hours a day, seven days a week.

SEL OVERVIEW

WHO WE ARE

Our mission at SEL is to make electric power safer, more reliable, and more economical. To accomplish this mission, SEL designs, manufactures, and supports a complete line of products and services for the protection, monitoring, control, automation, security, and metering of electric power systems. SEL solutions range from comprehensive generator protection to distribution automation and control systems.

SEL customers come from a wide variety of industries and include government agencies, airports, universities, water treatment facilities, mining operations, factories, research facilities, data centers, hospitals, pharmaceuticals, refineries, utilities, rural electric cooperatives, and municipalities.

While most SEL product lines are designed and manufactured in Pullman, Washington, and Lewiston, Idaho, SEL also designs and manufactures fault indicators and sensors in Lake Zurich, Illinois, and panels and control enclosures in San Luis Potosí, Mexico. The close relationship between manufacturing and research and development enables SEL to rigorously follow quality standards, beginning with designs and extending through manufacturing and field support. Our worldwide, ten-year warranty demonstrates our commitment to the quality and value we deliver to our customers. SEL holds ISO 9001:2008 certification and continually exceeds U.S. and international testing standards.

WHERE WE ARE

Teams in 22 countries around the world provide local sales and technical service. With SEL solutions in more than 144 countries, we stay close to our customers. Our commitment to quality extends through a product's installation and life as part of our customers' critical infrastructure. Application and integration engineers, customer service representatives, and sales managers in our national and international technical service centers truly understand the importance of local support. The SEL network of independent sales representatives and distributors provides additional sales support in many regions.

WHERE WE CAME FROM

Edmund O. Schweitzer, III, Ph.D., founded SEL in 1982 in Pullman, Washington. The company introduced the world's first digital protective relay to the electric power industry in 1984. The first SEL digital relay, the SEL-21, revolutionized the power protection industry by providing fault locating and real fault data at a much lower cost to the customer than traditional electromechanical relays. With the introduction of the load-encroachment element for feeder protection, synchrophasors as a standard feature in protective relays, and Mirrored Bits® relay-to-relay communications, SEL continues to lead the technology curve.

SEL became an employee-owned company in 1994 and transitioned to 100 percent employee ownership in 2009. With more than 3,000 employees around the world, SEL continues to grow in its capacity for innovation and customer support.

SEL COMMITMENT TO QUALITY

WHAT DOES SEL QUALITY MEAN TO CUSTOMERS?

- SEL products and service conform to its published specifications and meet or exceed the customer's expectations.
- Ten-year, no-questions-asked, worldwide warranty, with exception for fault indicators, which are warrantied for five years.
- SEL products have a 500-year mean time between failures (MTBF).
- SEL doesn't charge customers for analysis or repair of a problem, regardless of the cause of the failure, even if the product was damaged by electrical or physical overstress.
- A quick repair time; 85% of all products repaired are returned to customers within 72 hours.
- SEL will provide the customer with a new product at no charge, If SEL technicians can't repeat the customer observed failure or get to root cause issue.
- Low cost of ownership through reliable products.

NEWTON-EVANS RESEARCH COMPANY SURVEY

The Newton-Evans Research Company periodically conducts an independent customer survey. "The Worldwide Study of the Protective Relay Marketplace in Electric Utilities: 2012–2014; Volume 1: North American Market" reports survey results of utility protection and control engineers and engineering managers from 80 utilities. Respondents rank top relay manufacturers in the areas of technology, price, features, technical service and support, security, ease of use/setup, maintenance, and web/Internet information. SEL consistently ranks first in all categories. We use the customer feedback provided in this survey as another performance gauge to evaluate and improve our processes, products, and services.

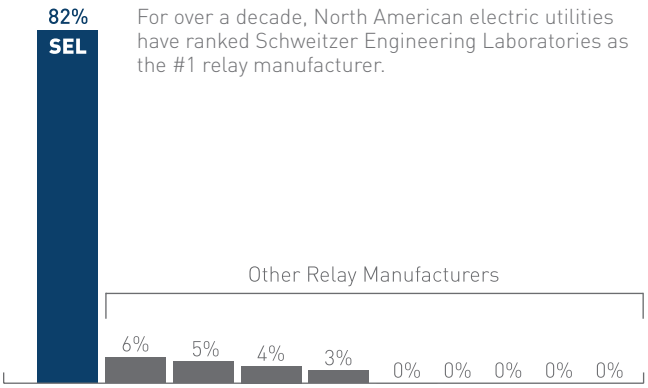

Percentage of first place votes in 2012–2014 study.

TESTIMONIALS

"Reliability is a big issue due to the exposure a public utility has, and the utility made the decision to change out the other relays and go exclusively with the SEL-351 Relays. When I heard that, it was all the testimony I needed. When I showed my people what our local power supplier down at Yates had gone through, that was all it took. My recommendation wasn't even challenged,"

—Charlie Adams, Senior Engineer, Marathon Oil

"I don't use SEL relays just because I think SEL makes the best relays and meters on the market. I don't use SEL relays and meters just because they have the most user programmability of any relays or meters on the market. I don't use SEL relays and meters just because I think they have the most flexibility of any relays or meters on the market. I don't use SEL relays just because I think SEL has by far the best technical support of anyone in the business. I use SEL relays and meters because I believe SEL is a leader in ALL of the above areas, but mostly I use SEL relays and meters because SEL and its people are committed to doing the job right and making the user (me) happy with the end product."

—Tim Burttram, Plant Electrical Engineer & Senior project Manager, Cascade Steel Rolling Mills

"The statement I keep hearing back all the time from our field engineers who actually do the commissioning of the relays is, 'If it's blue, we like it."

—Steve Jordan, Transmission Design and Construction, Alabama Power

"Otter Tail Power Company's employees continually compliment the quality of workmanship, innovative features, and excellent customer service provided by SEL."

—Rod Scheel, Vice President, Asset Management, Otter Tail Power Company

HOW DOES SEL ACHIEVE QUALITY?

Robust Designing

The SEL design process is documented, controlled, and certified under the ISO 9001:2008 standard, Quality Management Systems Requirements. The SEL Research and Development (R&D) Division applies this process to new product development and product enhancement projects.

R&D works with Manufacturing to create robust designs that adhere to the SEL Design for Manufacturability (DFM), Design for Test (DFT), and Design for Automation (DFA) guidelines. SEL designs products for a service life of over 25 years using the following strategies:

- Keep designs simple.
- Select the most reliable components specified for high-temperature operation.
- Apply components well within specified ratings.
- Test products beyond specified performance and type test limits.
- Perform ongoing review of product repair data for design improvement opportunities.

Scan the QR code to watch the R&D testing video.

State-of-the-Art Manufacturing

SEL uses a formal procedure to plan, monitor, and complete new product introductions. We use Design for Manufacturability (DFM), Design for Test (DFT), and Design for Automation (DFA) guidelines to implement best practices, and we document, control, monitor, evaluate, and improve day-to-day manufacturing operations. The following are key actions in this process:

- Documenting work instructions.
- Measuring and reporting on key performance requirements.

Scan the QR code to watch the manufacturing video.

IPC-A-610 Class 3 Standard

SEL uses state-of-the-art equipment and controlled processes to build to the highest workmanship standards (IPC-A-610 Class 3). Class 3 is the most stringent level possible, which is appropriate when products must function in uncommonly harsh environments with no downtime, such as life-support and aerospace system applications.

Regress Testing

We perform board-level tests before unit assembly, record defects, and review quality measures daily. We functionally test our products using environmental stress screening at –40° to +85°C (–40° to +185°F). The only exception is for our computers, which we screen at –40° to +75°C (–40° to +167°F). Environmental stress screening ensures our products operate at the specified temperature extremes and identifies and eliminates early-life component failures and process errors.

Manufacturing Team Training

All direct labor manufacturing positions in SEL require operator certification, and receive both classroom and hands-on training. Through formal testing, assemblers, inspectors, and test technicians recertify regularly, based on SEL process requirements and industry standards.

THE SEL ADVANTAGE

WHAT ADVANTAGE CAN YOU EXPECT FROM SEL PRODUCTS AND SERVICES?

Application, Protection, and Integration Engineering Support
We have experienced field application engineers and integration application engineers available to answer our customers' technical questions. These engineers are located throughout our 55 offices in the United States and 46 offices in an additional 22 countries worldwide. SEL engineering professionals provide an array of services, including cost-effective solution designs, application and operation of SEL or other intelligent devices, turnkey solutions, and commissioning.

Exceptional Customer Service
Our customer service representatives understand and anticipate your needs and requirements. Working closely with our customers helps SEL continue to supply the highest-quality equipment and services—the cornerstone of SEL's mission and success. Customer service representatives are located at our company headquarters in Pullman, Washington, and in our regional and international technical service centers.

North American utilities chose SEL as #1 among protective relay manufacturers for all categories in a recent independent study conducted by Newton-Evans Research Company. They ranked SEL first in technology, price, features, security against hackers, technical support, web information, ease of use, and maintenance cost.

Local Field Offices Worldwide
At SEL, we stay close to our customers through our 101 offices worldwide. We maintain various language skills in addition to local knowledge and experience with industrial and commercial applications.

Ten-Year, Worldwide Product Warranty
The SEL ten-year, worldwide product warranty is proof of our confidence in the high quality of the products we manufacture, following the strictest industry standards.

Disaster Relief Discount
Safe electrical power can become a lifeline when natural disasters occur. Rapid response and flexibility are critical during these times of distress. SEL offers a 10 percent discount on all protective relays and associated products destined for natural disaster relief. In addition, SEL will expedite delivery of these relays in order to help restore power at the earliest possible time.

Certifications
SEL works with customers, sales partners, and accreditation agencies to obtain the certifications necessary to provide relevant products to a variety of industries and markets worldwide. Various SEL products, divisions, and procedures have received certification from the following organizations. For more information about SEL's many international certifications, please contact your local sales representative.

- 10 CFR Appendix B Nuclear Quality Program
- ABS Marine Type Approval
- CE (Europe)
- CPRI (India)
- CSA (Canada)
- ENA (UK)
- EPRI (China)
- IEC, including IEC 61850-10 Conformance and IEC 61850-3 Reliability
- IEEE, including IEEE 1613 Reliability
- IREDA (India)
- ISO 9001:2008
- KEMA
- KESCO (Korea)
- LAPEM (Mexico)
- RUS (for rural electric cooperatives)
- TNB Research (Malaysia)
- UL
- VPP Star Safety

SEL SAFETY

IMPROVE SAFETY BY APPLYING SEL TECHNOLOGY

Significantly improve safety, prevent injuries, and reduce liability exposure by applying SEL products and services. Do more with remote communication to avoid entering hazardous areas, controlling traffic, and suiting up in special protective clothing.

Ten Simple Ways to Improve Safety with SEL Technology:

1. Install SEL relays with arc-flash detection that can operate as fast as 2 milliseconds after an arc-flash event.
2. Work with SEL Engineering Services to identify and categorize arc-flash hazards and mitigation solutions.
3. Apply Wireless Fault Indication System to reduce the need to enter underground vaults.
4. Install SEL BLUETOOTH® to Serial Adapter to communicate wirelessly without entering hazardous areas.
5. Rely on SEL relays to interrupt electrical faults with industry-leading trip times.
6. Monitor relay diagnostic alarms, and notify operators if protection is out of service.
7. Apply reliable SEL devices that minimize travel to and working within hazardous locations to maintain the devices.
8. Communicate remotely to distributed control systems (DCS) and reduce localized communications.
9. Use SEL fiber-optic communications to optically isolate the personnel from the electrical system.
10. Detect and trip arcing downed conductors with SEL Arc Sense™ technology (AST).

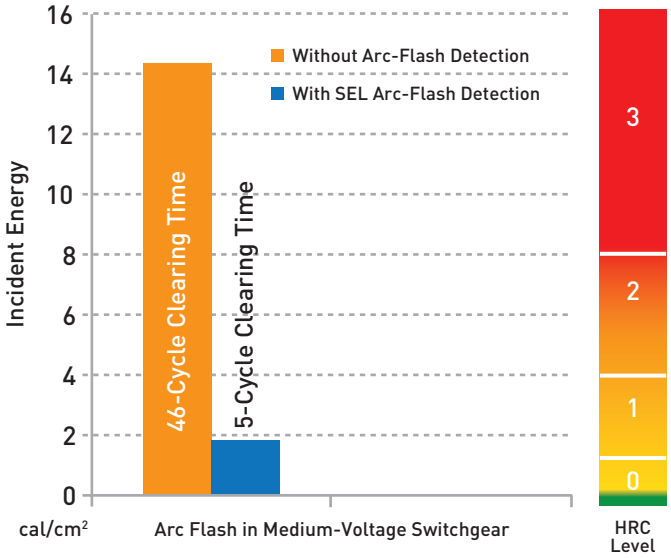

Substantial reductions in arc-flash hazards and Hazard/Risk Category (HRC) levels are achievable with SEL's arc-flash detection and mitigation solutions.

Scan the QR code to watch the arc-flash protection video.

SEL arc-flash protection saves lives.

SEL PRODUCT APPLICATION GUIDE

Central Offices

- Graphical Settings Software
- State Measurement Software
- SEL Display Clocks

- Enterprise Event Viewing Software
- Synchrophasor Visualization Software
- Settings Software
- Application Design Software
- SEL University

SEL Engineering Services and Power Management Solutions

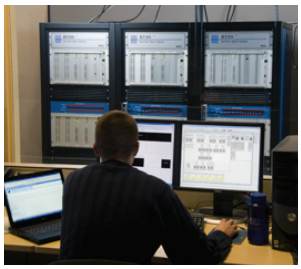

- Model Power System Testing
- Protection and Automation Services
- Arc-Flash Hazard Services
- POWERMAX® Power Management and Control Systems
- Remedial Action Schemes
- Autosynchronization Systems
- Distribution Automation

Substations

POWERCORE® Substation Control Enclosures

Complete Substation Systems (SEL-7000)

Satellite-Synchronized Clocks (SEL-2401, SEL-2407®, SEL-2488)

Display Clock (SEL-3401)

Protection, Automation, and Bay Control System (SEL-451)

Low-Impedance Bus Differential (SEL-487B)

High-Impedance Differential (SEL-587Z)

Power Quality and Revenue Meters (SEL-734, SEL-735)

Programmable Automation Controller (SEL-2411)

DPAC Discrete Programmable Automation Controller (SEL-2440)

Annunciators (SEL-2522, SEL-2523, SEL-2533)

Computer (SEL-3355)

Station PDC (SEL-3373)

SEL ICON® Integrated Communications Optical Network

Axion® Modular RTU/PLC (SEL-2240)

Real-Time Automation Controllers (SEL-3530/3530-4, SEL-3555)

I/O Devices

Security Gateways (SEL-3620, SEL-3622)

Event Messenger (SEL-3010)

Tough Ethernet Switches (SEL-2730M, SEL-2730U, SEL-2725, SEL-2740M, SEL-2740S)

Encrypted Ethernet Radio (SEL-3060)

Encrypted Serial Radio (SEL-3031)

BLUETOOTH® Serial Adapters (SEL-2924, SEL-2925)

Fiber-Optic Transceivers

Trip Coil Monitor (SEL-2652)

MIRRORED BITS® Tester (SEL-4388)

Industrial/Commercial

Motor Protection (SEL-701, SEL-749M, SEL-849)

Advanced Motor Protection for Direct Retrofit (SEL-710)

High-Function, Three-Phase Panel Meters (SEL-734, SEL-735)

Annunciators (SEL-2522, SEL-2523, SEL-2533)

Programmable Automation Controller (SEL-2411)

DPAC Discrete Programmable Automation Controller (SEL-2440)

Feeder Protection Relay With Arc-Flash Detection (SEL-751, SEL-751A)

Fast Bus Transfer (SEL-451)

Computer (SEL-3355)

Axion Modular RTU/PLC (SEL-2240)

Underground Vaults

Underground AutoRANGER®

RadioRANGER® Wireless Fault Indication System

Paper-Insulated Lead Cable Fault Indicator

Network Protector Relay (SEL-632)

Voltage Regulators

Voltage Regulator Control (SEL-2431)

Satellite-Synchronized Clock (SEL-2401)

BLUETOOTH Serial Adapter (SEL-2925)

Generators

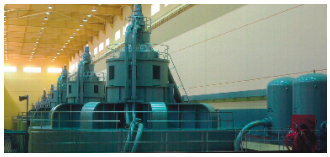

- Comprehensive Generator Protection (SEL-300G, SEL-700G)
- RTD Module (SEL-2600)
- Field/Stator Ground Module (SEL-2664, SEL-2664S)

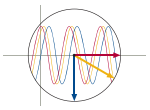

SEL Synchrophasors

Real-Time Synchrophasor Vector Processor (SEL-3378)

SYNCHROWAVE® PDC With Archiving (SEL-5073)

SYNCHROWAVE Central Software (SEL-5078-2)

Station PDC (SEL-3373)

Transmission Lines

- Subcycle Distance Relaying (SEL-421)
- Line Differential (fiber, digital channels) (SEL-311L, SEL-411L)
- Midrange Distance (SEL-311C)
- Zero-Settings Line Differential (SEL-387L)

Distributed Generation

- Basic DG Relay (SEL-547)
- Intertie/Wind Generator Protection (SEL-700GT, SEL-700GW)
- Real-Time Automation Controller (SEL-3505)
- Recloser Controls (SEL-651R, SEL-351R)

Power Transformers

- Five-Winding Transformer Differential With Voltage Protection (SEL-487E)
- Four-Winding Transformer Differential (SEL-387)
- Three-Winding Transformer Differential With Voltage Protection (SEL-387E)
- Two-Winding Transformer Differential (SEL-587)
- Two-, Three-, and Four-Winding Transformer Differential With Voltage Protection (SEL-787)
- Transformer Monitor (SEL-2414)

Circuit Breakers

- Breaker Failure (SEL-352)
- Protection, Automation, and Bay Control System (SEL-451)

Shunt Capacitor Banks

- Capacitor Protection and Control System (SEL-487V)
- Capacitor Control (SEL-734B)

Medium Power Transformers

- Current Differential Relay (SEL-587)
- Current Differential and Overcurrent Relay (SEL-387A)
- Transformer Monitor (SEL-2414)
- Two-, Three-, and Four-Winding Transformer Differential With Voltage Protection (SEL-787)

Reclosers

- Recloser Controls (SEL-651R, SEL-351R, SEL-351RS Kestrel®)
- Encrypted Serial Radio (SEL-3031)
- BLUETOOTH Serial Adapter (SEL-2925)
- Satellite-Synchronized Clock (SEL-2401)
- Real-Time Automation Controller (SEL-3505)

Distribution Feeders

- Distribution Protection (SEL-351)
- Feeder Protection Relay With Arc-Flash Detection (SEL-751, SEL-751A)
- Protection, Automation, and Bay Control System (SEL-451)
- Overhead AutoRANGER
- Overcurrent/Reclosing Relay (SEL-551)
- Current Reset Fault Indicator
- Dual Universal Overcurrent Relay (SEL-501)

EXAMPLE INDUSTRIAL PLANT ONE-LINE DIAGRAM

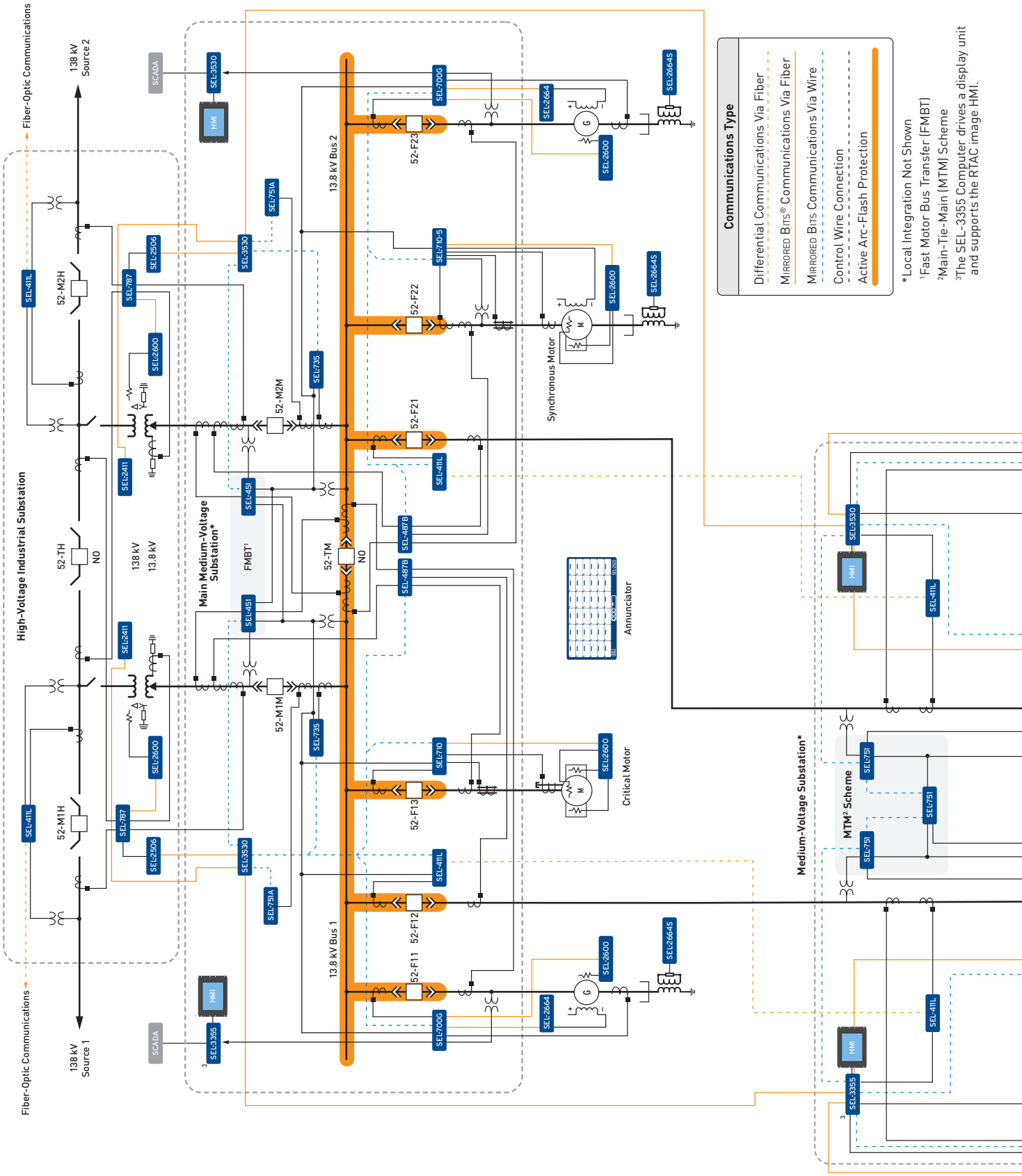

SEL-3530 RTAC Integrated Web-Based HMI

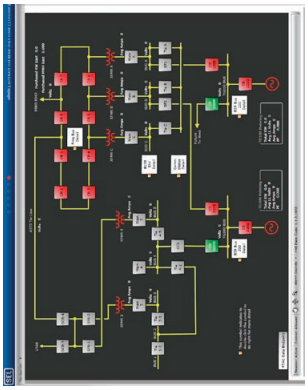

Interactive plant-level one-line diagram.

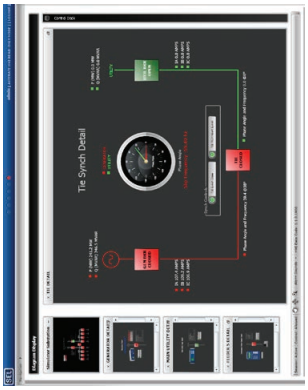

Real-time view and control of applications.

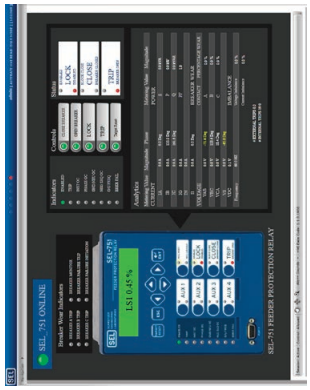

Customizable product-level configuration.

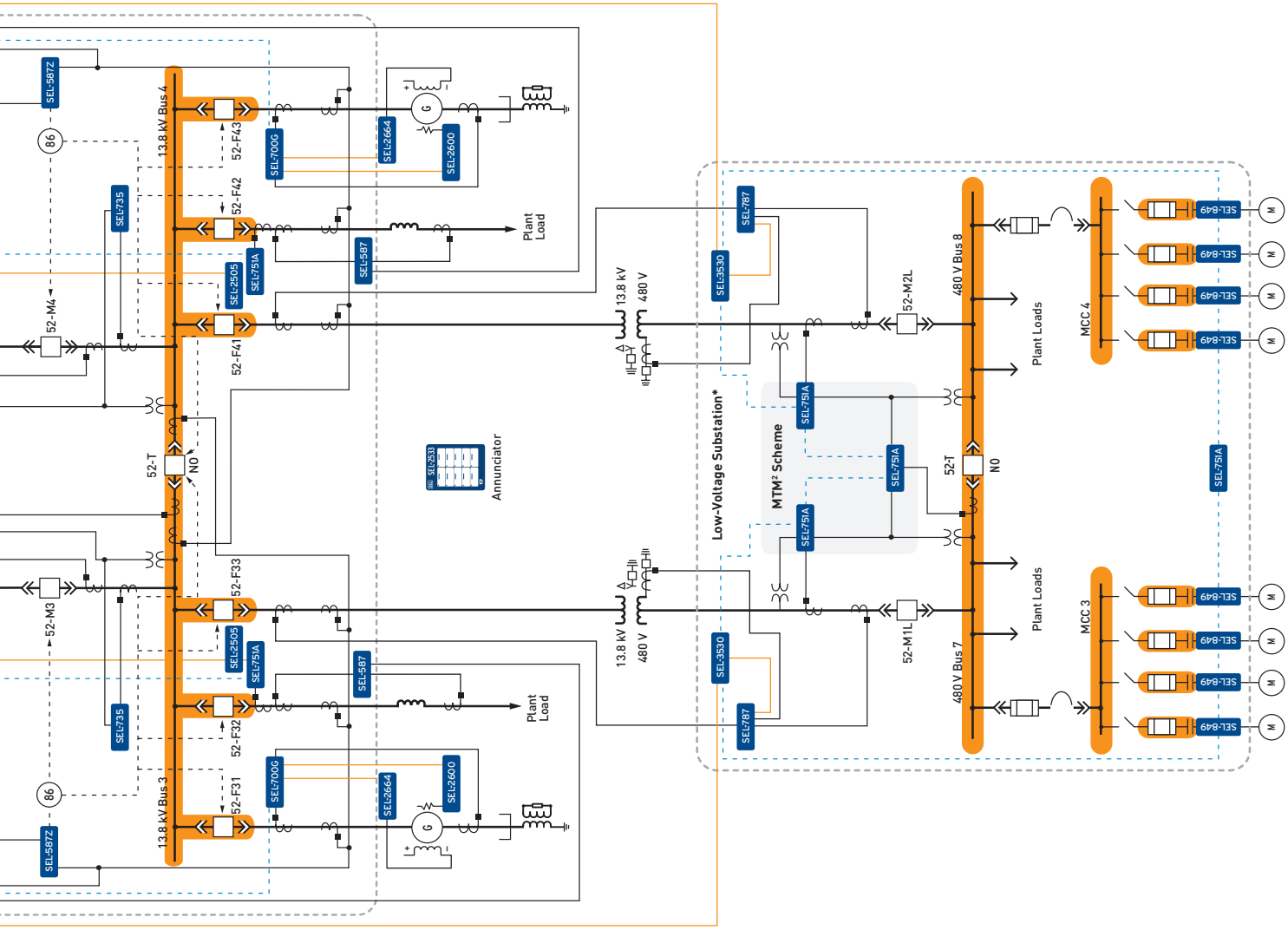

AUTOMATION AND INTEGRATION OVERVIEW

Today, SEL offers technologies, products, systems, and services that address the entire application spectrum, from communicating with a single relay to integrating and automating the metering, control, reporting, and protection for a large system. In electrical substations and commercial sites as well as generating, manufacturing, and processing plants, apply SEL microprocessor-based relays to protect the electrical system. Apply SEL networking, control, and communications solutions to integrate devices for data acquisition plus remote and local control.

SEL relays, information processors, and systems support many architectures. SEL information processors include Real-Time Automation Controllers (RTACs), communications processors, and tough computers with appropriate software.

Controllers and input/output (I/O) solutions include the SEL-2411 Programmable Automation Controller, SEL-2440 DPAC Discrete Programmable Automation Controller, and SEL-2240 Axion®, which are appropriate for a variety of control and I/O mix requirements.

To communicate with serial port devices, we recommend using our information processors as the hubs of star networks, with a point-to-point fiber or copper connection between the hub and each device. Fiber-optic links provide superior noise immunity and safety. Star topologies allow each device to communicate at a different bit rate and with a different command set or protocol. This independence, coupled with the strong parsing and command capabilities of SEL information processors, enables communication with many devices.

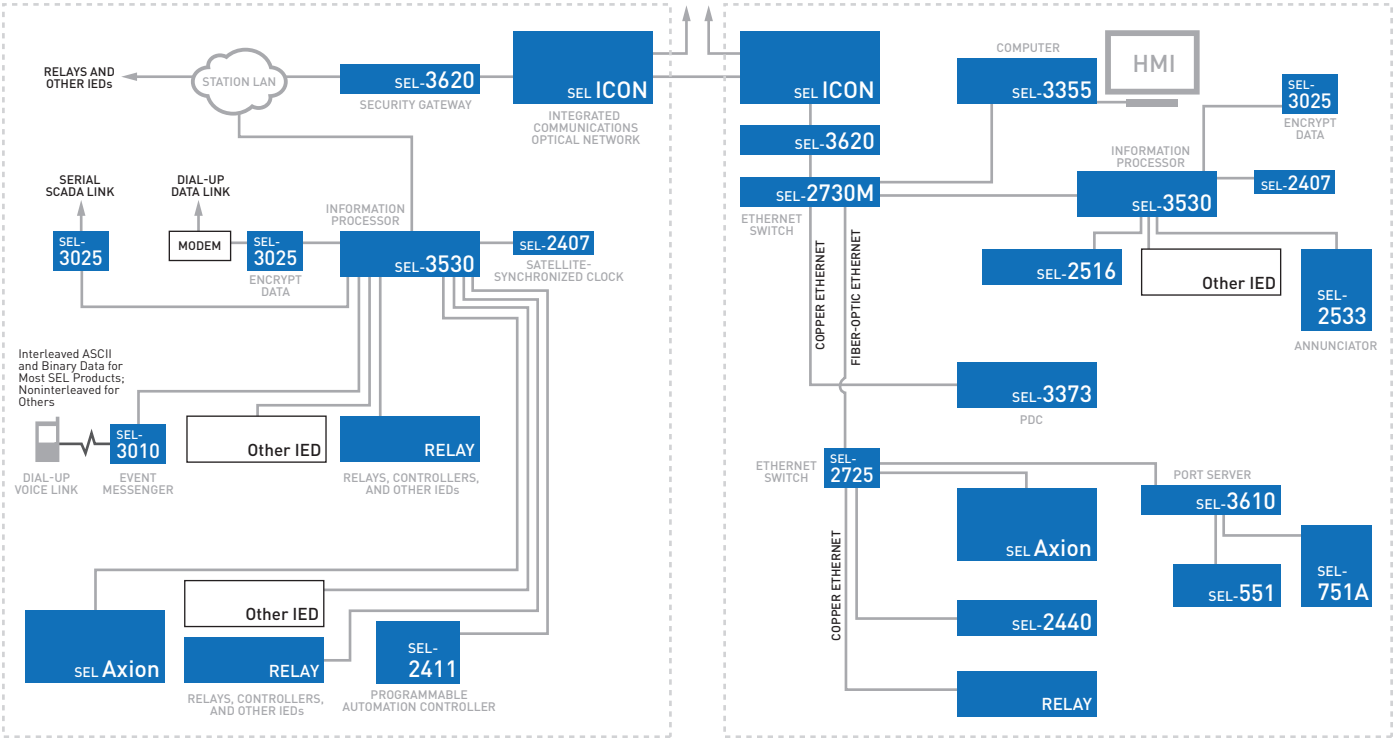

Many modern devices communicate via an Ethernet network. Build your Ethernet local-area network (LAN) with the SEL-2730M Managed 24-Port Ethernet Switch and SEL-2725 Five-Port Ethernet Switch, SEL shielded Ethernet cables, and SEL fiber-optic cables. SEL-3610 Port Servers connect Ethernet networks to serial devices. Choose tough SEL computing and networking products, which are far more reliable and robust than office or industrial computer equipment and ideal for protocol conversion, local human-machine interfaces, event report collection, data concentration, and more.

Many SEL relays include local, remote, and latched control switches and display points. With these features, you can replace or eliminate many external devices and associated panels, documentation, wiring, commissioning, testing, and maintenance. You benefit from reduced total cost, improved system reliability, and state-of-the-art protection, monitoring, and control.

The SEL-2100 Logic Processor and SEL-3530 or SEL-3530-4 RTAC can simply and economically provide bus and three-terminal line protection as well as automated control by connecting to multiple SEL relays using Mirrored Bits® communications links. They operate on the Mirrored Bits data through control logic and automatically send the proper trip and other control signals.

Information processors support external communications links, including the public switched telephone networks for engineering access or dial-out alerts, private line connections to your SCADA system, and wide-area networks (WANs). Many SEL relays and controllers have integral protocols and ports for connection to networks. The SEL ICON® Integrated Communications Optical Network provides the fiber-optic communications backbone.

SEL products and services are components of complete SEL solutions for instrumentation, protection, reporting, monitoring, local and remote control, and automation.

EXAMPLE INDUSTRIAL AUTOMATION DIAGRAM

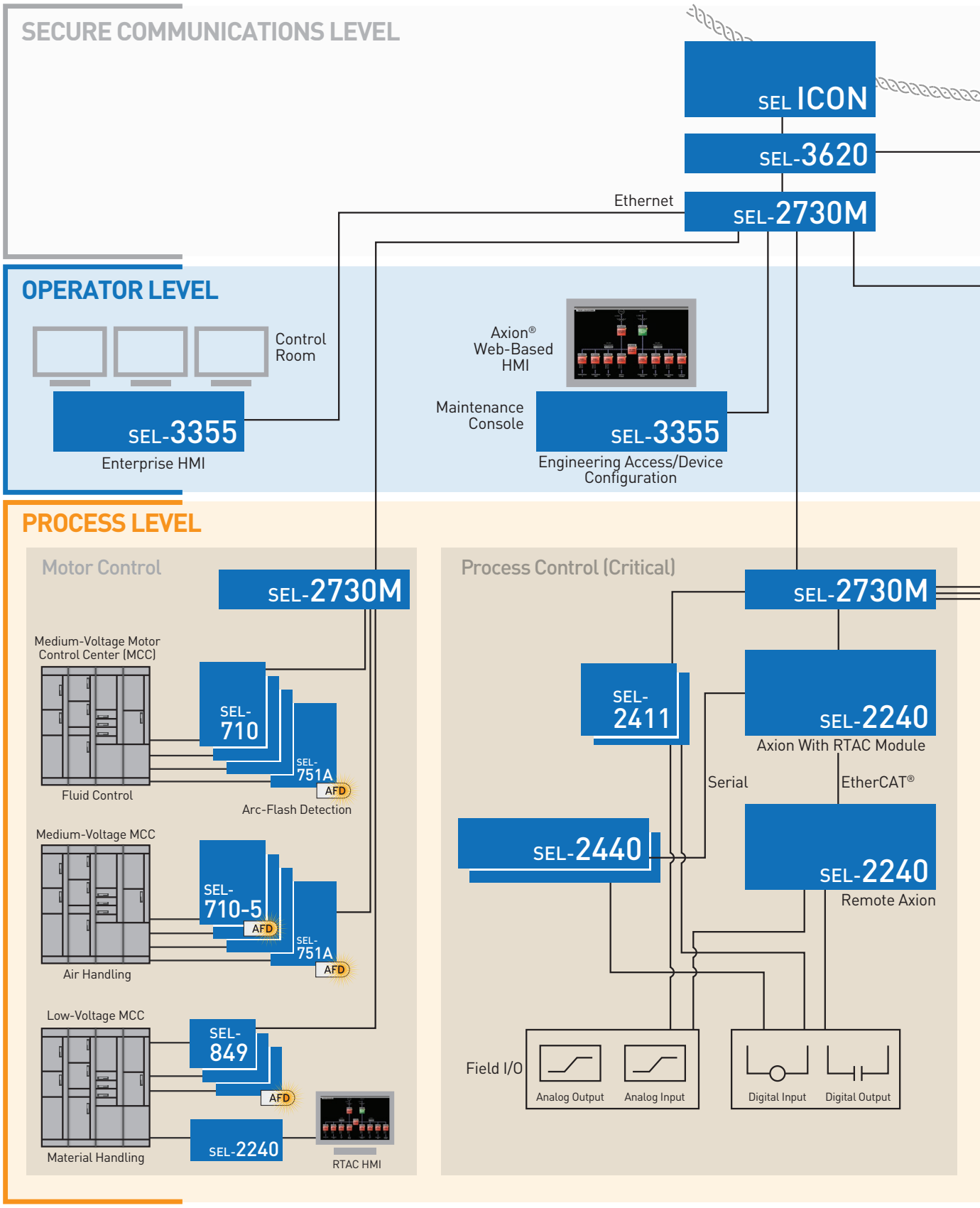

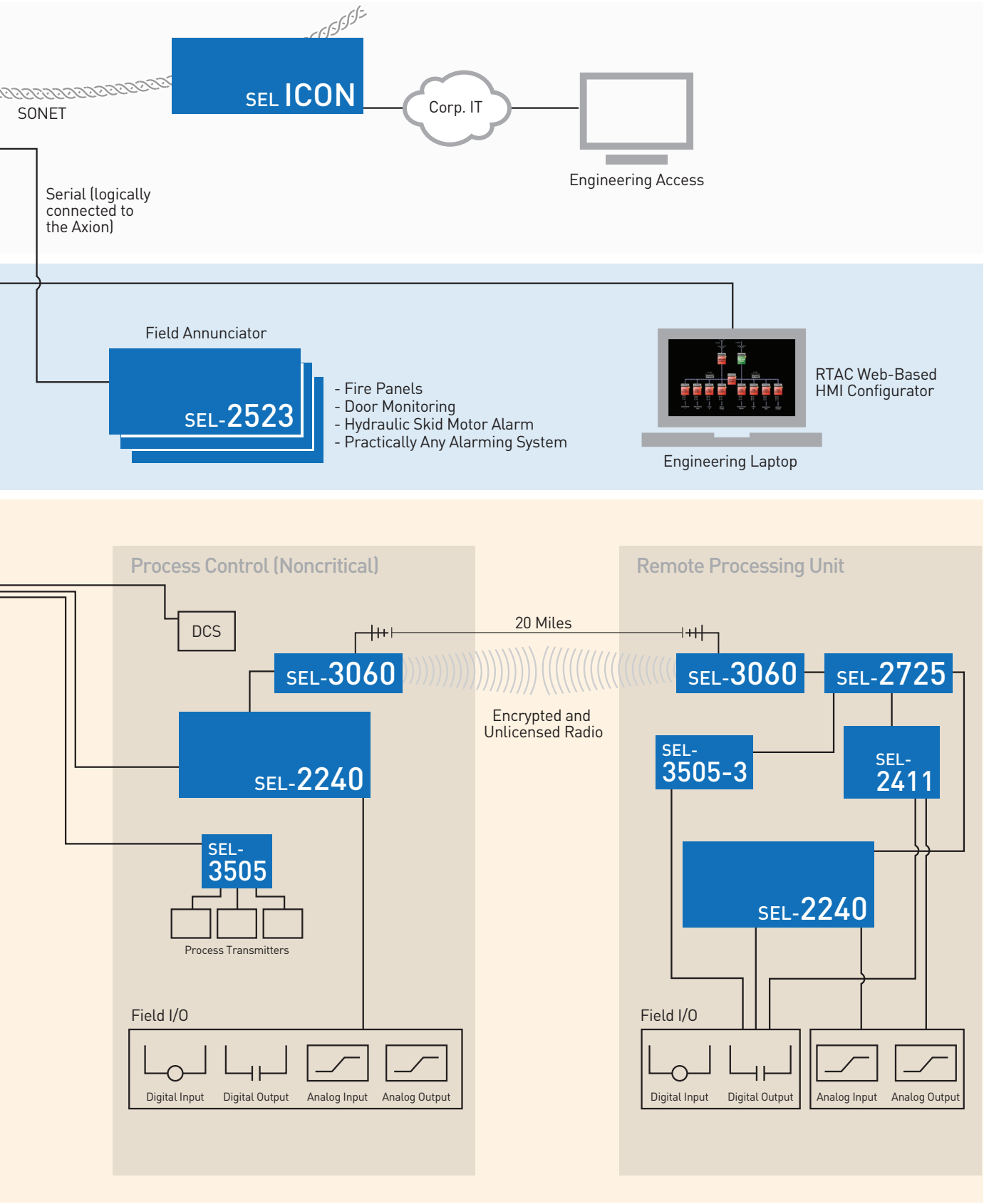
SONET
SEL ICON
Corp. IT
Engineering Access
Serial (logically connected to the Axion)
Field Annunciator
SEL-2523
- Fire Panels
- Door Monitoring
- Hydraulic Skid Motor Alarm
- Practically Any Alarming System
RTAC Web-Based HMI Configurator
Engineering Laptop
Process Control (Noncritical)
DCS
SEL-3060
SEL-2240
SEL-3505
Process Transmitters
Field I/O
Digital Input
Digital Output
Analog Input
Analog Output
20 Miles
Encrypted and Unlicensed Radio
Remote Processing Unit
SEL-3060
SEL-2725
SEL-3505-3
SEL-2411
SEL-2240
Field I/O
Digital Input
Digital Output
Analog Input
Analog Output

MAXIMUM PERFORMANCE. MINIMUM SPACE.

A FULL LINE OF COMPACT RELAYS FOR ALL YOUR POWER SYSTEM NEEDS

Complete protection and control for new and retrofit applications, detailed event reporting and flexible communications, and software-assisted commissioning and monitoring for all of your industrial and commercial applications.

SEL-700G GENERATOR PROTECTION RELAY

The SEL-700G Relay is the right solution for all generator protection, with advanced features, including:

- Comprehensive protection for large, medium, and small generators, with numerous voltage, frequency, distance, power, and out-of-step elements.
- Built-in automatic synchronizer that eliminates the need for expensive external synchronizer equipment.
- Single or dual ports, copper or fiber-optic Ethernet or serial communications, and several protocols for custom configurations.
- One hundred percent stator winding coverage to detect stator ground faults on high-impedance grounded generators.
- Optional current differential elements that detect stator faults using a secure, sensitive current differential function.
- Sensitive power elements that protect against reverse power, overload conditions, or low forward power.

See SEL-700G Generator Protection Relay options on page 18.

SEL-751A FEEDER PROTECTION RELAY WITH ARC-FLASH DETECTION TECHNOLOGY

The SEL-751A Relay with flexible I/O is the right solution for industrial applications.

- Mitigate arc-flash hazards with instantaneous light sensing.
- Analyze overcurrent protection system performance using the built-in Sequential Events Recorder (SER).
- Customize front-panel pushbutton operation and LEDs or default breaker trip/close function.
- Personalize LCD messages with event-driven point displays and site-specific references.
- Integrate control systems with various I/O and communications options.
- Use comprehensive reporting to assist with understanding events, scheduling maintenance, detecting undesirable trends, modifying loads, and satisfying information requirements of supervisory systems.
- Include resistance temperature detection (RTD) inputs as part of system integration or to bias protection.
- Increase system reliability through applying the SEL-751A in the Main-Tie-Main Automatic Transfer Scheme.

See SEL-751A Feeder Protection Relay options on page 20.

SEL-710 AND SEL-710-5 MOTOR PROTECTION RELAYS

Apply advanced motor protection for the industry's toughest applications:

- Reduce time between motor starts, and safely extend times for high-inertia starts with SEL's patented AccuTrack thermal model.
- Detect motor abnormalities, including broken rotor bars, using spectrum analysis.
- Improve safety using optional arc-flash detection (AFD).
- Protect induction and synchronous motors using a single relay platform.
- Apply with reduced-voltage start (including wye-delta starting), two-speed motors, and motors using variable-frequency drives (VFDs).
- Avoid misoperation during cyclic overloads (e.g., crushers and chippers).
- Monitor and record motor data (including RTD temperature data) to confirm motor sizing, understand system events, plan maintenance, modify loads, or provide data to supervisory systems.
- Install in unfavorable environmental conditions, including temperature range from –40° to +85°C (–40° to +185°F) and as much as 95 percent relative humidity (noncondensing).

See SEL-710 and SEL-710-5 Motor Protection Relays options on page 22.

GENERATOR PROTECTION

	SEL-300G	SEL-700G	SEL-700GT	SEL-700GW	SEL-547	SEL-2664S
APPLICATIONS						
Generator Protection	•	•	*			•
Induction Motor Protection	•					
Feeder Protection				•		
Breaker Failure Protection	*f*	•	•		*f*	
Equipment Thermal Monitoring	*	*	*	*		
Generator Intertie Protection			•		•	
Synchronism Check	*	*	•		•	
Integrated Synchronizer		*	*			
PROTECTION						
21P Phase Mho or Compensator Distance	•	*				
24 Overexcitation (Volts/Hertz)	•	•	•			
27/59 Under-/Overvoltage	•	•	•		•	•
32/37 Directional/Underpower Elements	•	•	•		•	
40 Loss-of-Field	•	•	*			
46 Current Unbalance	•	•	*			
47 Phase Reversal					•	
49 Thermal		•	*			
50 (P,N,G) Overcurrent (Phase, Neutral, Ground)	•	•	•	•		
50Q Negative-Sequence Overcurrent	•	•	•	•		
51 (N,G) Time-Overcurrent (Neutral, Ground)	•	•	•	•		
51 (P,Q) Time-Overcurrent (Phase, Neg. Seq.)			•	•		
55 Power Factor	*f*	*f*	*f*			
60 Loss-of-Potential	•	•	•			
64G 100 Percent Stator Ground	•	*				
64F Field Ground	•	•	*			
64S Injection-Based 100% Stator Ground						•
67 (N,G) Directional Overcurrent (Neutral, Ground)		•	•			
78 Out-of-Step	•	•				
81 Over-/Underfrequency	•	•	•		•	
87 Current Differential	*	*				
87G Restricted Earth Fault		•	*			
Separate Neutral Overcurrent	•	•	*			
Inadvertent Energization	*f*	*f*				
Flashover Protection	*f*	*f*				
INSTRUMENTATION AND CONTROL						
SELOGIC® Control Equations/Remote Control Switches	•	•	•	•	•	•
Nonvolatile Latch Control Switches	•	•	•	•		•
Multiple Settings Groups	•	•	•	•	•	•
Station Battery Monitor	•					
Breaker Wear Monitor	•	•	•	•		
Event Report (Multicycle Data)/Sequential Events Recorder	•	•	•	•	•	•
Demand Meter	•	•	•	•		
Load Profile Report		•	•	•		
RTD (Resistance Temperature Detector) Inputs	*	*	*	*		
Ethernet		*	*	*		•
IEC 61850		*	*	*		•
DNP3 LAN/WAN		*	*	*		•
Simple Network Time Protocol (SNTP)		•	•	•		
Modbus® TCP		•	•	•		•
Modbus RTU Outstation	*	•	•	•	•	
Synchrophasors With IEEE C37.118 Protocol		•	•	•		
MIRRORED BITS® Communications		•	•	•		•
DeviceNet™		*	*	*		
MISCELLANEOUS FEATURES						
Accepts Wye or Open-Delta Voltage Transformers	•	•	•		*	
Connectorized® (Quick Disconnect) Available	*					

• Standard Feature * Model Option
f This function may be created using settings

Numerous current, voltage, frequency, distance, power, and out-of-step elements in SEL generator protection relays provide comprehensive protection for large, medium, and small generators.

AUTOMATIC GENERATOR CONTROL

SEL's generation control system regulates generator power outputs and manages utility interties to maximize system stability, minimize electrical disturbances, and mitigate load-shedding requirements. The SEL-700G Generator Protection Relay in combination with SEL's POWERMAX® Power Management and Control System can balance generation loading, control tie line power flow, and maintain bus voltage.

The automatic MVAR and voltage control system maintains MVAR flows on interties and system bus voltages by controlling load tap changers, generator field and large synchronous motor exciters, synchronous and static condensers, and capacitor banks.

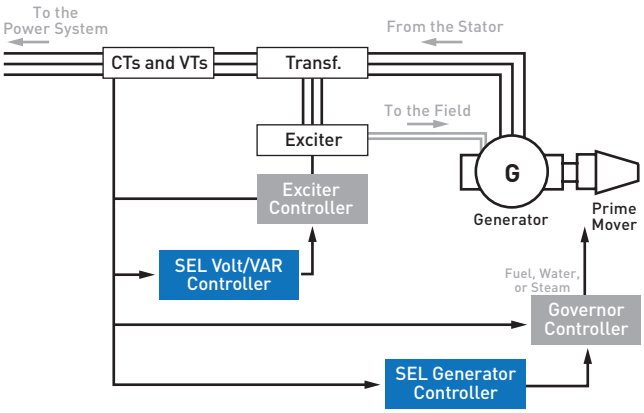

SEL-700G

The SEL-700G Generator Protection Relay is the right solution for generator protection, with autosynchronizer, flexible I/O, and advanced communications.

SEL-700GT

The SEL-700GT Intertie Protection Relay provides an IEEE 1547 compliant intertie protection solution for distributed generation.

SEL-700GW

Protect wind generation feeders and maximize turbine availability by isolating faults with the SEL-700GW Wind Generator Relay.

SEL-300G

Apply the SEL-300G Generator Relay for comprehensive primary and backup generator protection.

SEL-547

Apply the low-cost, compact SEL-547 Distributed Generator Interconnection Relay with essential protection and control elements for distributed generation.

SEL-2664S

Protect high-impedance grounded generators from ground faults at standstill, during startup, and while running by using the multisine frequency injection and neutral overvoltage-based protection in the SEL-2664S Stator Ground Protection Relay.

DISTRIBUTION PROTECTION

	SEL-451	SEL-351	SEL-351A	SEL-351S	SEL-751	SEL-751A	SEL-501/501-2	SEL-551/551C	SEL-2431	SEL-351R	SEL-651R
APPLICATIONS											
Distribution Feeder Protection	•	•	•	•	•	•	•	•		•	•
Breaker Failure Protection	•	•	*f*	•	•	•	*	*f*		*f*	*f*
Generator Intertie Protection	•	•	•	•	*	*				•	•
Recloser Control										•	•
Synchronism Check	•	•	•	•	*	*				*	•
Underfrequency Load Shedding	*f*	•	•	•	•	•				•	•
Undervoltage Load Shedding	*f*	•	•	•	•	*				•	•
32-Step Single-Phase Voltage Regulator									•		
Capacitor Bank Control											
PROTECTION											
27/59 Under-/Overvoltage	•	•	•	•	•	*				•	•
32 Directional Power Elements	*f*	*		*	•	*					•
49 Thermal Overload	*f*										
50 (P,N,G,Q) Overcurrent Element (Phase, Neutral, Ground, Neg. Seq.)	•	•	•	•	•	•	•	•		•	•
51 (P,N,G,Q) Time-Overcurrent Element (Phase, Neutral, Ground, Neg. Seq.)	•	•	•	•	•	•	•	•		•	•
67 (P,N,Q) Directional Overcurrent (Phase, Neutral, Neg. Seq.)	•	•	•	•	*					•	•
81 Over-/Underfrequency	•	•	•	•	•	•				•	•
Separate Neutral Overcurrent	•	•	•	•	•	•		•		•	•
Load-Encroachment Supervision	•	•	•	•	*					•	•
Mirrored Bits® Communications	•	*		*	•	•				•	•
Sensitive Earth Fault Protection		*	*	*		*				•	•
Directional Sensitive Earth Fault Protection		*	*	*						•	•
Pilot Protection Logic	•	•		•						•	*f*
Rate-of-Change-of-Frequency (df/dt)	*f*	•	•	•	•	*					•
Harmonic Blocking	•	•	*	•							•
Arc Sense™ Technology (AST) High-Impedance Fault Detection	*				*						*
Arc-Flash Detection					*	*					
Phantom Phase Voltage		•	•	•						•	•
Current/Voltage Channels	6/6	4/4	4/4	4/4	4/4	4/4	6/0	4/0	1/2	4/4	4/6
Complete Two-Breaker Control	•						•				
INSTRUMENTATION AND CONTROL											
79 Automatic Reclosing	•	•	•	•	*	*		•		•	•
Fault Locating	•	•	•	•	•					•	•
SELogic® Control Equations With Remote Control Switches	•	•	•	•	•	•		•	•	•	•
SELogic Counters	•				•	•			•	*	•
Voltage Check on Closing	•	•	•	•	*	*				•	•
Operator Control Pushbuttons	•			•	•	•			•	•	•
SELogic Nonvolatile Latch	•	•	•	•	•	•		*	•	•	•
Nonvolatile Local Control Switches	•	•	*	•	•	•		•	•	•	•
Display Points	•	•	*	•	•	•		•	•	•	•
Multiple Settings Groups	•	•	•	•	•	•			•	•	•
Substation Battery Monitor	•	•	•	•	*	*					
Breaker/Recloser Wear Monitor	•	•	•	•	•	•				•	•
Trip Coil Monitor	*f*	*f*	*f*	*f*	*f*	*f*		*f*		*f*	*f*
Voltage Sag, Swell, and Interruption (VSSI)	•	*		*							•
Load/Signal Profile Recorder	•	*		*	•	•			•	*	•
Sequential Events Recorder	•	•	•	•	•	•		•	•	•	•
Demand Meter	•	•	•	•	•	*	•	•	•	•	•
DNP3 Level 2 Outstation	*	•	•	•	*	*			•	•	•
Modbus® Outstation		•	•	•	•	•	*	*			•
IEEE C37.118 Synchrophasors	•	•	•	•	•	•			•		•
Bay Control	•										
Ethernet	*	•	•	•	*	*			*		•
IEC 61850	*	*	*	*	*	*					*
Simple Time Network Protocol (SNTP)	•	•	•	•	•	•					•
Independent Trip/Close Pushbuttons	*	*	*	*							
Harmonic Metering		•	•	•					•		•
RMS Metering	•	•	•	•	•	•					•

• Standard Feature * Model Option *f* This function may be created using settings

SEL-751A

The SEL-751A Feeder Protection Relay with arc-flash detection is the optimum solution for industrial feeder protection, with innovative light sensing, flexible I/O, advanced communications, and easy mounting options.

SEL-451

Combine directional overcurrent protection with complete control by using the SEL-451 Protection, Automation, and Bay Control System.

SEL-351

Choose the SEL-351 Protection System for transmission or distribution overcurrent protection.

SEL-501

Simplify protection in two-high switchgear with two independent sets of protection elements in the SEL-501 Dual Universal Overcurrent Relay.

SEL-551

Combine overcurrent protection and multiple-shot reclosing in the SEL-551 Overcurrent/Reclosing Relay.

SEL-2431

Optimize system voltage with the SEL-2431 Voltage Regulator Control by using directional voltage profiles and detailed tap-change event reports.

SEL-351R

Use the SEL-351R Recloser Control for easy recloser control upgrades with advanced directional overcurrent and frequency elements as well as communications-assisted protection schemes.

SEL-651R

Apply the SEL-651R Advanced Recloser Control for Automatic Network Reconfiguration, single-phase tripping, and harmonics metering.

MOTOR PROTECTION

	SEL-710, SEL-710-5	SEL-749M	SEL-849
APPLICATIONS			
Induction Motor Protection	•	•	•
Synchronous Motor Protection	*		
Feeder Protection			•
Breaker Failure Protection	•	ƒ	•
Equipment Thermal Monitoring	*	*	•
PROTECTION			
27/59 Under-/Overvoltage	•	*	*
32/37 Directional/Underpower Elements	*	*	*
40 Loss-of-Field	*		
46 Current Unbalance	•	•	•
47 Phase Reversal	•	•	•
49 Thermal	•	•	•
50 (P,N,G) Overcurrent (Phase, Neutral, Ground)	•	•	•
50Q Negative-Sequence Overcurrent	•		•
51 (N,G) Time-Overcurrent (Neutral, Ground)	•		•
51 (P,Q) Time-Overcurrent (Phase, Neg. Seq.)	•		•
55 Power Factor	•	*	*
60 Loss-of-Potential	*	ƒ	*
78 Out-of-Step	*		
81 Over-/Underfrequency	•	•	*
87 Current Differential	*		
Arc-Flash Detection	*		•
Separate Neutral Overcurrent	•	•	•
Broken Rotor Bar Detection	*		
INSTRUMENTATION AND CONTROL			
SELOGIC® Control Equations/Remote Control Switches	•	•	•
Nonvolatile Latch Control Switches	•	•	•
Multiple Settings Groups	•		
Breaker Wear Monitor	•		
Event Report (Multicycle Data)/Sequential Events Recorder	•	•	•
Demand Meter	•		•
Load Profile Report	•		•
RTD (Resistance Temperature Detector) Inputs	*	*	
Ethernet	*		•
IEC 61850	*		*
DNP3 LAN/WAN	*		
Simple Network Time Protocol (SNTP)	•		•
Modbus® TCP	•		•
Modbus RTU Outstation	•	•	•
Synchrophasors With IEEE C37.118 Protocol	•		
MIRRORED BITS® Communications	•		
DeviceNet™	*	*	
MISCELLANEOUS FEATURES			
Accepts Wye or Open-Delta Voltage Transformers	*	*	*

• Standard Feature * Model Option
ƒ This function may be created using settings

Protect a wide variety of low- and medium-voltage three-phase induction and synchronous motors using SEL's family of motor protection relays. Phase and neutral current elements feed accurate thermal models that track motor thermal characteristics during the stop/start/run cycles of the motor. One common application is a current-based protection scheme for across-the-line-started motors. Add the voltage option to certain SEL motor relays to enable the slip-dependent AccuTrack™ Thermal Model.

SEL-849 Web-Based HMI

ARC-FLASH PROTECTION

Arc-flash protection improves worker safety by reducing the incident energy of the arc flash. Supervised by phase overcurrent elements, SEL relays with arc-flash detection provide secure and fast arc-flash protection.

FLEXIBLE MOTOR STARTING

Take advantage of your SEL relay's ability to control multiple contactors, and apply motor protection in configurations for two-speed motors, full-voltage reversing, and star-delta (reduced-voltage) starting. This diagram shows interlocking contactors for a two-speed start.

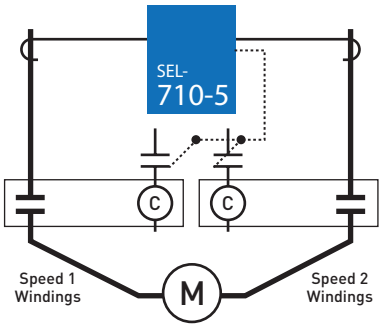

SEL-849

Install the SEL-849 Motor Management Relay in motor protection applications for current-, voltage-, and thermal-based protection, arc-flash detection, and power metering.

SEL-710

Apply the SEL-710 Motor Protection Relay to accurately calculate slip, minimize time between starts, and precisely track motor temperature.

SEL-710-5

Provide motor applications with comprehensive protection using the arc-flash and broken rotor bar detection capabilities in the SEL-710-5 Motor Protection Relay.

SEL-749M

Use the reliable and economical SEL-749M Motor Relay to protect three-phase motors, including two-speed and reduced-voltage start motors.

SEL-451

Implement motor bus transfer schemes to keep industrial processes running with the SEL-451 Protection, Automation, and Bay Control System.

For product features, see page 34.

SEL-849

MOTOR MANAGEMENT RELAY

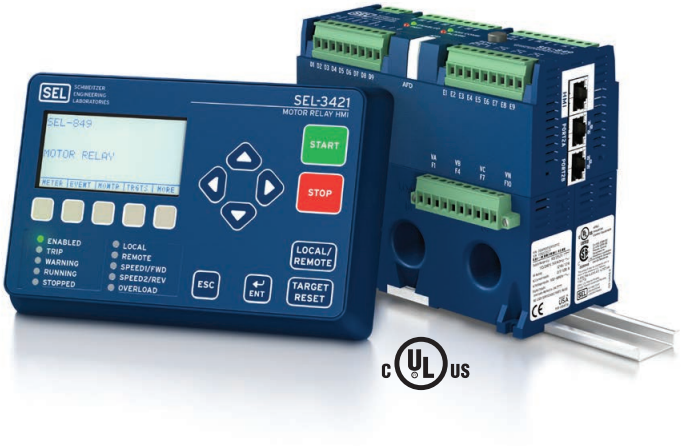

FEATURED APPLICATIONS

Motor Protection—Protect low- or medium-voltage three-phase induction and variable frequency drive (VFD)-fed motors with an enhanced thermal model. Connect an external core-balanced current transformer (CBCT) to obtain sensitive ground-fault detection in high-impedance grounded systems.

Arc-Flash Mitigation—Improve worker safety using the SEL-849 Motor Management Relay's built-in arc-flash detection (AFD). The AFD, supervised by overcurrent elements, delivers secure, reliable, and fast-acting arc-flash protection.

Feeder Protection—Configure flexible instantaneous and time overcurrent elements to protect feeder circuits.

Direct Connection—Connect up to 690 V to the optional voltage inputs and up to 128 FLA (full-load amperes) through the built-in CT primary circuits. Use external instrument transformers for higher voltages or currents.

Detachable Human-Machine Interface (HMI)—Install SEL-849 Relays in motor control center (MCC) buckets, and connect the optional display modules (SEL-3421 or SEL-3422) outside the MCC for secure and safe relay access.

Metering and Monitoring—Analyze SER reports and oscillographic event reports for rapid commissioning, testing, and post-fault diagnostics. Reduce separately mounted metering/monitoring devices by taking advantage of the SEL-849 Relay's motor start report, motor start trending, motor operating statistics, and demand metering features.

Integration—Select from a variety of communications ports and protocols—IEC 61850, Modbus®, SEL ASCII, and SNTP—to integrate SEL-849 Relays into supervisory or coordinated protection and control systems.

FOR COMPLETE INFORMATION, VISIT SELINC.COM/SEL-849

SECURE ARC-FLASH DETECTION

The SEL-849 combines overcurrent and overlight measurements to deliver secure, reliable high-speed arc-flash protection.

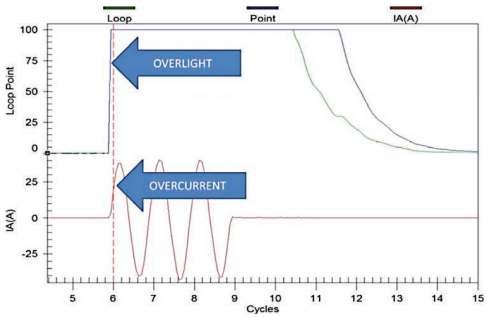

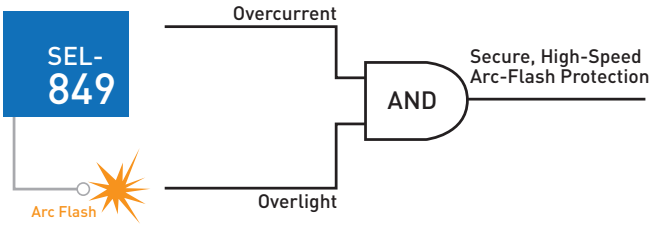

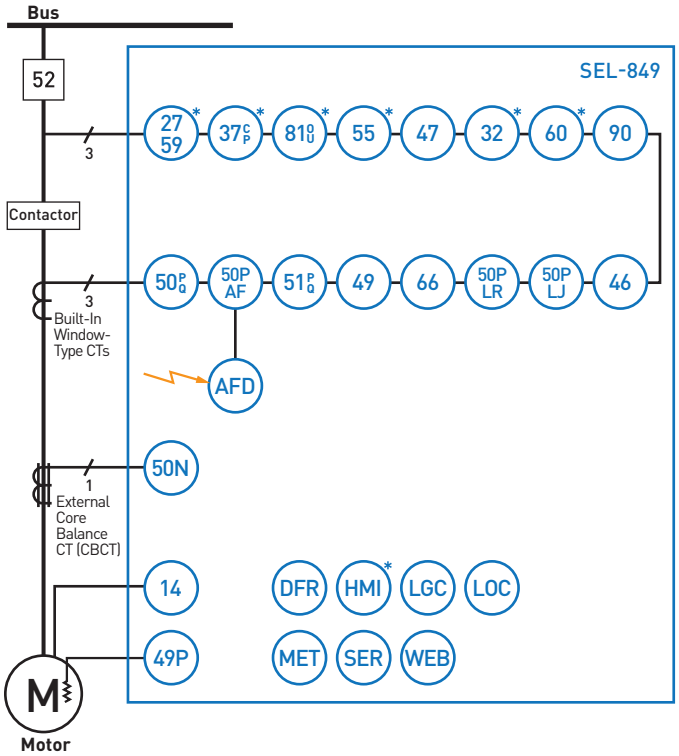

ANSI NUMBERS/ACRONYMS AND FUNCTIONS	
14	Speed Switch
27	Undervoltage*
32	Directional Power*
37 (C,P)	Undercurrent, Underpower*
46	Current Unbalance
47	Phase Reversal
49	Thermal Model
49P	PTC Overtemperature
50G AF	Arc-Flash Residual Overcurrent
50N	Ground Overcurrent
50P AF	Arc-Flash Phase Overcurrent
50 (P,G,Q)	Overcurrent (Phase, Ground, Neg. Seq.)
50P LJ	Load Jam
50P LR	Locked Rotor
51 (P,G,Q)	Time Overcurrent (Phase, Residual, Neg. Seq.)
55	Power Factor*
59P	Phase Overvoltage*
60	Loss-of-Potential*
66	Starts-Per-Hour
81 (O,U)	Over-/Underfrequency*
90	Load Control

ADDITIONAL FUNCTIONS	
AFD	Arc-Flash Detector
CC	Conformal Coating*
DFR	Event Reports—Motor Starts, Motor Operating Statistics, Sequential Events Recorder
HMI	Operator Interface*
LDP	Load Data Profiling
LGC	SELOGIC® Control Equations
MET	Metering—RMS Voltage and Current, Frequency, Power, Power Factor, Thermal, Thermal Capacity Used
SER	Sequential Events Recorder
VFD	Variable-Frequency Drive Support
WEB	Web Server

*Optional Feature

MOTOR PROTECTION AND INTEGRATED ARC-FLASH DETECTION

Dimensionally compact, the SEL-849 fits inside the MCC bucket and protects low- and medium-voltage induction motors in a variety of configurations, including across-the-line start, two-speed starts, and VFD-fed motors. Equipped with flexible communications and protocol options, the relay is able to collaborate with other devices in fully integrated protection and control schemes.

An arc flash in the MCC bucket is a real danger. When an arc-flash incident occurs, the SEL-849 detects the resulting light and overcurrent conditions and sends a trip to the upstream breaker relay, reducing incident energy and improving worker safety.

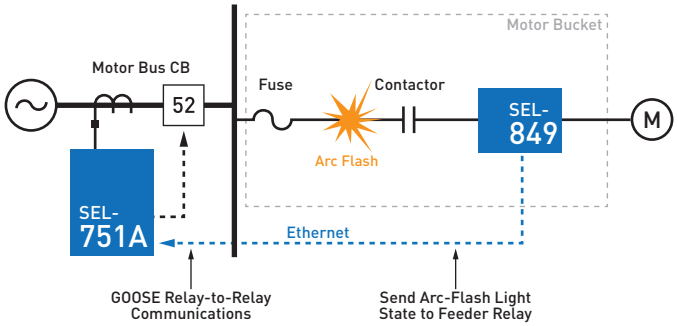

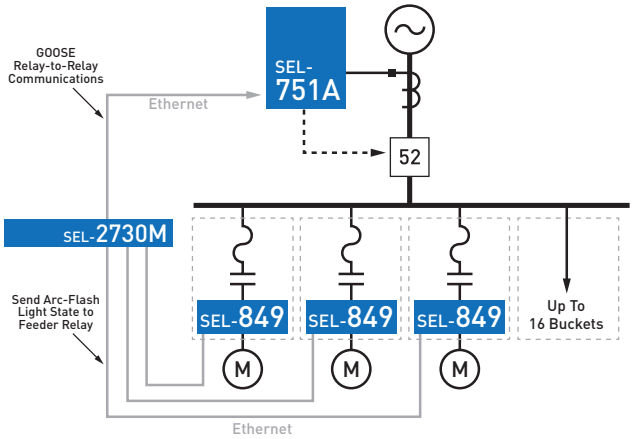

METERING

	SEL-735
APPLICATIONS	
Revenue Metering	•
Basic PQ and Recording, 32 MB	•
Intermediate PQ and Recording, 128 MB	*
Advanced PQ and Recording, 128 MB	*
MOUNTING	
Outdoor Enclosure	*
Easily Extractable Meter (EXM)	*
Portable Case	*
Rack, Panel, and Retrofits	•
INSTRUMENTATION AND CONTROL	
CL2/CL10/CL20 Current Inputs	•
3 Electromechanical Outputs, 2 Inputs, Slot A	•
4 Electromechanical Outputs, 4 Inputs, Slot D	*
4 Solid-State Outputs, 4 Digital Inputs, Slot D	*
4 Solid-State Outputs, 4 Analog Outputs, Slot D	*
COMMUNICATIONS	
ANSI Type 2 Optical Port	•
EIA-232	*
EIA-485	*
Telephone Modem	*
Ethernet	*
IRIG-B Time Input	•
PROTOCOLS	
SEL ASCII	•
SEL Fast Messages	•
Mirrored Bits® Communications	•
SEL Distributed Port Switch	•
Itron® MV-90® xi TIM	•
Modbus® RTU and TCP Outstation	•
DNP3 Level 2 Serial and LAN/WAN	•
IEC 61850	*

• Standard Feature * Model Option

REVENUE METERING

- Collect and report billing, power quality (PQ), and historical data.
- Replace obsolete transducers, and poll directly from SCADA with DNP3 or Modbus protocols.
- Support complex tariffs with multiple load profile data recorders.
- Provide flexible time-of-use (TOU) metering with a 20-year calendar.
- Use predictive demand to initiate load control and reduce demand charges.

POWER QUALITY

- Ensure consistent measurements with IEC 61000-4-30 compliance.
- Log and view VSSI events.
- Measure harmonic and interharmonic content through the 63rd order.

OUTDOOR

- Replace socket meters with a low-cost enclosure and prewired FT-1 test switch.
- Quickly install the meter with thoughtful design details, such as DIN rails for accessories; a lockable, stainless-steel latching system; wall-mount brackets; and wire clamps. The fully sealed enclosure complies with NEMA 4X, IEC 529, and IP 66 protection requirements.

EASILY EXTRACTABLE METER (EXM)

- Extract an SEL-735 Power Quality and Revenue Meter in less than one minute using the EXM option. A self-shorting CT connector automatically shorts CT secondaries when disconnected.
- Replace draw-out meters with simple retrofit brackets that match the existing panel cutout for legacy meters.

PORTABLE POWER QUALITY

- Monitor PQ anywhere with the SEL-735 Portable Power Quality Meter.
- Install temporary metering anywhere with a PQ meter in a rugged portable case.
- Pinpoint PQ problems and energy consumption on subcircuits with clamp-on current transformers and clip-on voltage leads.
- Log years worth of data with 128 MB of onboard memory.

SEL-735 POWER QUALITY AND REVENUE METER

Accurate and affordable revenue and power metering for any application.

Available in horizontal (shown) or vertical.

Monitor PQ anywhere with the SEL-735 Portable Power Quality Meter.

Easily replace draw-out and socket meters with the optional SEL EXM.

Available hinged mounting bracket.

BUS PROTECTION

	SEL-387	SEL-487B	SEL-487E	SEL-587Z
APPLICATIONS				
Breaker Failure Protection	*f*	•	•	*f*
Bus Differential	*f*	•	•	•
Transformer and Machine Current Differential	•		•	
High-Impedance Bus Differential				•
Low-Impedance Bus Differential	•	•	•	
Three-Phase Current Inputs	4	7/10/21‡	5	Common
Three-Phase Voltage Inputs		1	2	
PROTECTION				
27/59 Under-/Overvoltage		•	•	
46 Current Unbalance		*f*	•	
47 Voltage Unbalance			*f*	
50 (N,G) Overcurrent (Neutral, Ground)	•		•	•
50P Phase Overcurrent	•	•	•	•
50Q Negative-Sequence Overcurrent	•		•	•
51 (N,G) Time-Overcurrent (Neutral, Ground)	•		•	•
51P Phase Time-Overcurrent	•	•	•	•
51Q Negative-Sequence Time-Overcurrent	•		•	•
87 Current Differential	•	•	•	
87Z High-Impedance Differential				•
Single-Pole Trip/Close		•		
Three-Phase Differential Bus Zones	1	2/3/6‡	1	1
Check Zones		3		
INSTRUMENTATION AND CONTROL				
79 Automatic Reclosing		*f*	*f*	
Dynamic Zone Selection		•		
SELogic® Control Equations	•	•	•	•
Nonvolatile Latch Control Switches	•	•	•	
SELogic Remote/Local Control Switches	•	•	•	•
Display Points	•	•	•	•
Multiple Settings Groups	•	•	•	
Substation Battery Monitor	•	•	•	
Breaker Wear Monitor	•		•	
Event Report (Multicycle Data)	•	•	•	•
Sequential Events Recorder	•	•	•	•
Instantaneous Meter	•	•	•	•
Demand Meter	•		•	•
Through-Fault Monitor	•		•	
IEEE C37.118 Synchrophasors			•	
Synchrophasor Real-Time Control			•	
IEC 61850		*	*	
Built-In Web Server		•	•	
Simple Network Time Protocol (SNTP)		•	•	
Mirrored Bits® Communications		•	•	
Parallel Redundancy Protocol (PRP)		•	•	
MISCELLANEOUS FEATURES				
Connectorized® (Quick Disconnect) Available	*	*	*	

• Standard Feature * Model Option
f This function may be created using settings ‡ 1/2/3 Relay Application

LOW-IMPEDANCE BUS DIFFERENTIAL PROTECTION

Provide 2 three-phase zones of protection for up to 7 three-phase terminals (21 total current inputs) with a single SEL-487B Bus Differential and Breaker Failure Relay. Implement a per-phase check zone to increase security. For certain bus topologies, such as breaker-and-a-half, use 1 three-phase voltage input to increase security. Install the SEL-487B in a system with nondedicated CTs, with CT ratio mismatches up to 10:1. This allows the same CTs to be used in other protection applications. The relay also provides circuit breaker failure protection, control for up to 21 breakers and 60 disconnects, backup overcurrent protection, communications, and programmable logic control options.

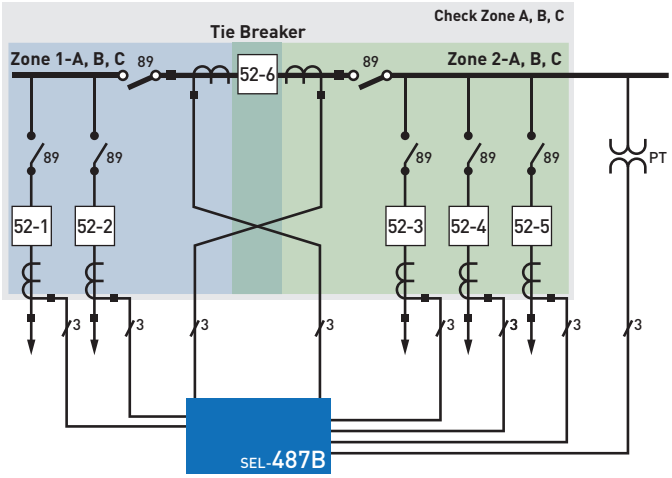

HIGH-IMPEDANCE BUS DIFFERENTIAL PROTECTION

Implement simple and cost-effective bus protection with the SEL-587Z High-Impedance Differential Relay. A single bus zone protects any number of bus terminals since the current inputs are connected in parallel before being brought to the relay. Create an easily expandable bus protection solution with simple settings and dedicated same-ratio CTs. The relay can also provide backup overcurrent protection, detect breaker failure, and detect open-circuit CT conditions.

SEL-387

Use the SEL-387 Current Differential and Overcurrent Relay for protection, monitoring, and automation applications for important buses, transformers, generators, and other power apparatus.

SEL-487B

Apply the SEL-487B Bus Differential and Breaker Failure Relay for busbar and breaker failure protection, automation, and control in applications with up to six terminals per relay.

SEL-587Z

Apply the SEL-587Z High-Impedance Differential Relay for single-zone bus protection, reactor protection, or sensitive restricted earth fault protection on grounded, wye-connected power transformer windings.

TRANSFORMER PROTECTION AND MONITORING

	SEL-487E	SEL-387E	SEL-387	SEL-387A	SEL-787	SEL-787-3/-4	SEL-587	SEL-2414
APPLICATIONS								
Breaker Failure Protection	•	*f*	*f*	*f*	•	•	*f*	*f*
Transformer and Machine Current Differential	•	•	•	•	•	•	•	
Low-Impedance Bus Differential	•	•	•					
Underfrequency Load Shedding	•	*f*			*	*		
Undervoltage Load Shedding	•	*f*			*	*		
Three-Phase Current Inputs	5	3	4	2	2	3 or 4	2	*
Three-Phase Voltage Inputs	2	1			1*	1*		1*
PROTECTION								
24 Overexcitation (Volts/Hertz)	•	•				*		
25 Synchronism Check	•					*		
27/59 Under-/Overvoltage	•	•				*		
32 Directional Power	•					*		
46 Current Unbalance	•							
49 Equipment Thermal Monitoring	•		*	•	•	•		
50FO Flashover Protection	*f*	*f*			*f*	*f*		
50 (N,G) Overcurrent (Neutral, Ground)	•	•	•	•	•	•	•	
50P Phase Overcurrent	•	•	•	•	•	•	•	
50Q Negative-Sequence Overcurrent	•	•	•	•	•	•	•	
51 (N,G) Time-Overcurrent (Neutral, Ground)	•	•	•	•	•	•	•	
51P Phase Time-Overcurrent	•	•	•	•	•	•	•	
51Q Negative-Sequence Time-Overcurrent	•	•	•	•	•	•	•	
67 (P,G,Q) Directional Overcurrent (Phase, Ground, Neg. Seq.)	•							
81 Under-/Overfrequency	•	•				*		
81R Change-in-Rate-of-Frequency	*f*					*		
87 Current Differential	•	•	•	•	•	•	•	
REF Restricted Earth Fault	•	•	•	*	*	•		
INSTRUMENTATION AND CONTROL								
SELOGIC® Control Equations	•	•	•	•	•	•	•	•
Voltage Check on Closing	*f*	*f*			*f*	*f*		
Transformer Cooling Fan Control	*f*				*f*	*f*		•
Nonvolatile Latch Control Switches	•	•	•	•	•	•		•
SELOGIC Remote Control Switches	•	•	•	•	•	•	•	•
SELOGIC Local Control Switches	•	•	•	•	•	•		•
Display Points	•	•	•	•	•	•		•
Multiple Settings Groups	•	•	•	•	•	•		
Substation Battery Monitor	•	•	•	•		*		*f*
Breaker Wear Monitor	•	•	•	•		•		
Event Report (Multicycle Data)	•	•	•	•	•	•	•	•
Sequential Events Recorder	•	•	•	•	•	•		•
Instantaneous Meter	•	•	•	•	•	•	•	•
Demand Meter	•	•	•	•	•	•	•	•
Load and Temperature Profile Report	•				•	•		•
RTD (Resistance Temperature Detector) Inputs					*	*		*
Built-In Web Server	•	•						
IEEE C37.118 Synchrophasors	•				•	•		
IEC 61850	*	*			*	*		*
Simple Network Time Protocol (SNTP)	•				•	•		
Parallel Redundancy Protocol (PRP)	•							
Through-Fault Monitor	•	•	*	•	•	•		•
Thermal Model/SEL-2600 RTD Module Communications	•		*	•	•	•		•
MISCELLANEOUS FEATURES								
Connectorized® (Quick Disconnect) Available	*	*	*			*	*	*

• Standard Feature * Model Option

f This function may be created using relay elements, device word bits, analog quantities, and timers.

MULTIWINDING TRANSFORMER PROTECTION

Provide current differential protection for up to five windings with an adaptive-slope percentage restraint for transformers at power plants, transmission substations, distribution substations, and industrial plants. Use the remaining three-phase current inputs for feeder backup protection.

Combine harmonic blocking and restraint functions in parallel to provide secure operation during inrush conditions. Second- and fourth-harmonic blocking provides security during energization, while fifth-harmonic blocking provides security for overexcitation conditions.

Implement the negative-sequence differential element for sensitive detection of interturn faults within the transformer winding.

THROUGH-FAULT AND THERMAL MONITORING

Track transformer wear with through-fault and thermal monitoring. Use the thermal element to activate a control action or issue an alarm when the transformer is in danger of excessive insulation aging or loss-of-life.

Gather current levels, through-fault duration, and the date/time of each through fault with transformer through-fault monitoring. Through-fault currents can cause transformer winding displacement, leading to mechanical damage and increased transformer thermal wear. Schedule proactive maintenance based on cumulative through-fault duty.

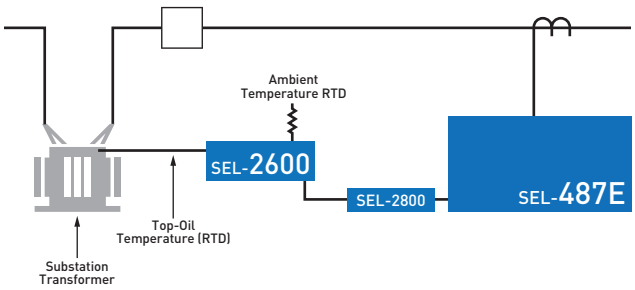

SEL-487E

Apply the SEL-487E Transformer Protection Relay for comprehensive protection, metering, monitoring, and automation of power transformer applications.

SEL-787

Apply advanced protection and monitoring with flexible communications to transformer applications up to four windings with the SEL-787 Transformer Protection Relay.

SEL-2414

Apply the SEL-2414 Transformer Monitor for complete system monitoring and control of new and existing transformers.

SEL-387/387A

Protect, monitor, and automate applications for transformers, generators, and other power apparatus with the SEL-387 and SEL-387A Current Differential and Overcurrent Relays.

SEL-387E

Use the SEL-387E Current Differential and Voltage Relay to provide comprehensive protection, metering, monitoring, and automation for transformers and other power apparatus.

SEL-587

Provide inexpensive differential protection for transformers or other apparatus with the SEL-587 Current Differential Relay.

TRANSMISSION AND SUBTRANSMISSION PROTECTION

	SEL-411L	SEL-421	SEL-311C	SEL-311B	SEL-311A	SEL-311L	SEL-387L	SEL-311M	SEL-321
APPLICATIONS									
Distance Protection	•	•	•	•	•	•			•
Line Current Differential	•					•	•	•	
Breaker Failure Protection	•	•	*f*	*f*	*f*	*f*		*f*	*f*
Undervoltage Load Shedding	*f*	*f*	*f*	*f*		*f*		*f*	*f*
Series-Compensated Lines	*	*							
PROTECTION									
21G Mho Ground Distance	•	•	•	•	•	•			•
21XG Quad Ground Distance	•	•	•			•			•
21P Mho Phase Distance	•	•	•	•	•	•			•
25 Synchronism Check	•	•	•	•		•		•	
27/59 Under-/Overvoltage	•	*f*	•	•		•		•	•
49 Thermal	*f*	*f*							
50 (N,G) Overcurrent (Neutral, Ground)	•	•	•	•	•	•		•	•
50P Phase Overcurrent	•	•	•	•	•	•		•	•
50Q Negative-Sequence Overcurrent	•	•	•	•		•		•	•
51 (N,G) Time-Overcurrent (Neutral, Ground)	•	•	•	•	•	•		•	•
51P Phase Time-Overcurrent	•	•	•	•	•	•		•	•
51Q Negative-Sequence Time-Overcurrent	•	•	•	•		•		•	•
67 (N,G) Directional Overcurrent (Neutral, Ground)	•	•	•	•	•	•		•	•
67P Phase Directional Overcurrent	•	•	•	•	•	•		•	
67Q Negative-Sequence Directional Overcurrent	•	•	•	•		•		•	•
81 Under-/Overfrequency	•	•	•			•		•	
87L Line Current Differential	•					•	•	•	
Sensitive Earth Fault (SEF)								•	
Programmable Analog Math	•	•							
Out-of-Step Block and Trip	•	•	•			•			•
Load-Encroachment Supervision	•	•	•	•	•	•		•	•
Switch-Onto-Fault	•	•	•	•	•	•		•	•
Single-Pole Trip	•	•	*			*			•
Zone/Level Timers	•	•	•	•	•	•		•	•
Pilot Protection Logic	•	•	•			•		•	•
INSTRUMENTATION AND CONTROL									
79 Automatic Reclosing	•	•	•	•	*f*	•			*f*
Number of Controlled Breakers	2	2	1	1	1	1	1	1	1
Fault Locating	•	•	•	•	•	•			•
Traveling Wave Fault Location	*								
Subcycle Distance Elements	*	*	*						•
SELogic® Control Equations	•	•	•	•	•	•		•	•
Nonvolatile Latch Control Switches	•	•	•	•	•	•		•	
SELogic Remote Control Switches	•	•	•	•	•	•		•	•
SELogic Local Control Switches	•	•	*	*	*	•		•	
Display Points	•	•	*	*	*	•		•	
Mirrored Bits® Communications	•	•	•	•	•	•		•	•
Substation Battery Monitor	•	•	•	•	•	•	•	•	
Breaker Wear Monitor	•	•	•	•	•	•		•	
Trip Coil Monitor	*f*	*f*	*f*	*f*	*f*	*f*		*f*	•
Event Report (Multicycle Data)	•	•	•	•	•	•	•	•	•
Sequential Events Recorder	•	•	•	•	•	•	•	•	•
Instantaneous Meter	•	•	•	•		•	•	•	•
DNP3 Level 2 Outstation	•	•	•	*	*	*	*		*
IEC 61850 Communications	*	*	*			*			
Synchrophasors (SEL Format)	•	•	•	•	•	•			
Synchrophasors (IEEE C37.118 Format)	•	•	•						
MISCELLANEOUS FEATURES									
Accepts Delta Voltage Transformers			*					•	
Connectorized® (Quick Disconnect) Available	*	*	*	*	*				*
Configurable Labels	•	•	*						

• Standard Feature * Model Option *f* This function may be created using settings

MULTITERMINAL TRANSMISSION LINES

Protect three-terminal transmission lines with distance or differential transmission line protection methods. Transmission relays include multiple zones of distance protection, zero-sequence compensation for accurate ground-distance reach on either side of the tap, and independent reach settings for both mho and quadrilateral elements.

Differential relays include the distance protection for backup and rely on Alpha Plane technology combined with overcurrent supervision, external fault detection, and disturbance detection logic. This enables the 87L function to operate with exceptional security and sensitivity for multiterminal line protection.

OPTIMIZED SYSTEM LOADING

Set the phase distance and phase overcurrent elements independent of load to prevent load from causing the phase protection to operate. Under heavy load conditions, the measured impedance may fall inside the operating characteristic of a traditional phase distance element and cause an undesired operation. Previously, solutions included reducing mho element reach or using a lenticular characteristic to prevent load encroachment. With built-in load-encroachment logic, two load regions are defined on the impedance plane and the relay rejects a minimum portion of the mho element characteristic, as shown. This allows the user to securely apply distance protection elements on heavily loaded transmission lines.

SEL-411L

Apply high-speed single- or three-pole subcycle current differential protection as well as distance protection and optional traveling wave fault location with the SEL-411L Advanced Line Current Differential Protection, Automation, and Control System.

SEL-421

Apply innovative line protection as part of a comprehensive station automation package with the SEL-421 Protection, Automation, and Control System.

SEL-311L

Use the SEL-311L Line Current Differential System with full-scheme backup for easy-to-apply, high-speed line protection.

SEL-311C

Apply the SEL-311C Transmission Protection System for three-pole distance protection, reclosing, monitoring, and control of transmission lines.

SEL-311B

Create step distance protection using the SEL-311B Distance Relay With Recloser with four-shot reclosing and synchronism check elements.

SEL-311A

Implement backup distance protection at very low cost with the SEL-311A Phase and Ground Distance Relay.

SEL-387L

Use the SEL-387L Line Current Differential Relay for economical, easy-to-apply line protection with zero settings.

BREAKER FAILURE AND CAPACITOR BANK PROTECTION

	SEL-352	SEL-451	SEL-487B	SEL-487V
APPLICATIONS				
Breaker Failure Protection, Number of Three-Phase Breakers	1	2	7	1
Bus Differential			•	
Shunt Capacitor Bank Protection		*f*		•
Underfrequency Load Shedding		*f*		*f*
Undervoltage Load Shedding	*f*	*f*	*f*	*f*
PROTECTION				
25 Synchronism Check	•	•		
27/59 Under-/Overvoltage	•	•	•	•
32/37 Power Elements	•	*f*	*f*	•
46 Current Unbalance	•	*f*	*f*	•
47 Voltage Unbalance		*f*	*f*	*f*
49 Equipment Thermal Monitoring	*	*f*		*f*
50FO Flashover Protection	•	•		•
50 (N,G) Overcurrent (Neutral, Ground)	•	•		•
50P Phase Overcurrent	•	•	•	•
50Q Negative-Sequence Time-Overcurrent		•		•
51 (N,G) Time-Overcurrent (Neutral, Ground)		•		•
51P Phase Time-Overcurrent		•	•	•
51Q Negative-Sequence Time-Overcurrent		•		•
60 (N,P) Current Unbalance (Neutral, Phase)				•
67 Directional Overcurrent		•		•
81 Under-/Overfrequency		•		•
81R Frequency Rate of Change				•
87 Current Differential			•	
87V Voltage Differential	•	*f*		•
Single-Pole Trip/Close	•		•	
INSTRUMENTATION AND CONTROL				
Open-Pole Detection		*f*	*f*	•
79 Automatic Reclosing	*f*	•	*f*	*f*
SELOGIC® Control Equations	•	•	•	•
Voltage Check on Closing		•		
Nonvolatile Latch Control Switches	•	•	•	•
SELOGIC Remote/Local Control Switches	•	•	•	•
Display Points	•	•	•	•
Multiple Settings Groups	•	•	•	•
Substation Battery Monitor	*	•	•	•
Breaker Wear Monitor	*	•		•
Voltage Sag, Swell, and Interruption Recording		•		•
Event Report (Multicycle Data)	•	•	•	•
Sequential Events Recorder	•	•	•	•
Instantaneous Meter	•	•	•	•
Demand Meter		•		•
Harmonic Metering				•
IEEE C37.118 Synchrophasors		•		•
IEC 61850		*	*	*
Built-In Web Server		•	•	•
Simple Network Time Protocol (SNTP)		•	•	•
Parallel Redundancy Protocol (PRP)		•	•	•
SEL-2600 RTD Module Communications	*	•		•
MISCELLANEOUS FEATURES				
Connectorized® (Quick Disconnect) Available	*	*	*	*
Synchrophasor Real-Time Control		•		•

• Standard Feature * Model Option
f This function may be created using relay elements and timers

BREAKER FAILURE DETECTION

Minimize system clearing times and equipment damage with integrated breaker failure protection and monitoring. Many SEL relays include breaker failure detection free of charge, either with built-in settings or user-implemented SELOGIC® control equations. The built-in breaker failure detection function uses innovative subsidence detection logic to recognize an open breaker condition by inspection of the ac current waveform. High-speed, open-pole detection logic detects open-pole conditions in fewer than 0.75 cycles to reduce breaker failure coordination times.

CAPACITOR BANK CONTROL

Control your capacitor banks without the time, wiring, and installation of additional devices. The SEL-487V-1 has dead-band control to keep the system voltage, VAR, or power factor within limits of your choosing. Or, for applications where the reactive power load varies predictably, use time-of-day or day-of-week scheduling to switch units in and out. Prevent excessive operation and wear with voltage instability logic, which detects when the relay is switching the units in a hunting fashion and stops operations or raises an alarm until the issue is resolved.

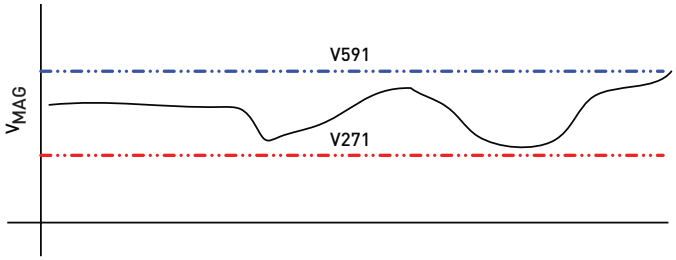

SEL-487V

Protect and control grounded and ungrounded, single- and double-wye capacitor bank applications with the SEL-487V Capacitor Bank Protection and Control System.

SEL-352

Provide comprehensive protection and unparalleled flexibility for breaker failure applications using the SEL-352 Breaker Failure Relay.

SEL-451

Combine directional overcurrent protection with complete control using the SEL-451 Protection, Automation, and Bay Control System.

SEL-487B

Apply the SEL-487B Bus Differential and Breaker Failure Relay for busbar and breaker failure protection, automation, and control in applications with up to six terminals per relay.

SEL-RS43/RS52/RS86

ROTARY SWITCHES

FEATURES AND BENEFITS

- Rated for 30 A, 600 Vac/250 Vdc nominal
- High breaking capacity: 8 A @ 125 Vdc, 2 A @ 250 Vdc
- High dielectric strength: 3100 Vdc HiPot, 5 kV impulse
- Tested to 500,000 mechanical operations and 6,000 electrical operations at breaking capacity to increase reliability, security, ease of use, and flexibility
- Captive screws for ring or fork terminals
- Configurable labels for maximum flexibility and safety
- Ergonomic handles for maximum torque
- Operating temperature: –40° to +85°C (–40° to +185°F)
- UL and seismic Class 2 certification
- Panel mounting
- Fast tripping
- Up to three switches on a 19", four UR (7") rack
- Special tools are not needed to mount, wire, and test
- Rugged double-break, single-throw contacts
- Rotary cam control switch designed for four independent contacts per deck
- Contacts and indicators are compatible with ac or dc systems and loads
- Lockout, maintained, or spring-return actions
- Modular design that allows repeatability and increased overall product quality

FOR COMPLETE INFORMATION, VISIT SELINC.COM/ROTARYSWITCHES

SEL-RS43 SELECTOR SWITCH

MODEL-SPECIFIC FEATURES

- Up to 16 contacts in 4 decks
- Up to 8 positions
- Maximum contact arrangement flexibility
- Maintained action
- Up to 3 configurable main LEDs
- Standard and custom configurations

SEL-RS52 BREAKER CONTROL

MODEL-SPECIFIC FEATURES

- Up to 20 contacts in 5 decks
- Spring return actions
- Electromechanical target
- Up to 3 configurable main LEDs

SEL-RS86 LOCKOUT

MODEL-SPECIFIC FEATURES

- Up to 60 contacts in 15 decks to allow direct trip and close block signals for bigger bus arrangements
- High-speed tripping
- Maintained action
- Electromechanical target
- LEDs for internal trip coil monitor and permanent fault indication

I/O PROCESSORS AND CONTROLLERS

	SEL-2240	SEL-2411	SEL-2440	SEL-2505	SEL-2506	SEL-2515	SEL-2516	SEL-2595	SEL-2600
APPLICATIONS									
Save Wiring Via I/O Multiplexing	•	•	•	•	•	•	•	•	•
I/O for SEL Relays/SEL-3530/SEL-2100	•	•	•	A	A				A
I/O for Information Processors	•	•	•			A	A		A
Transfer I/O to SEL-2505/2506	•	•	•	•	•				
Transfer I/O to SEL-2594/2595								•	
Teleprotection	•	•	•	•	•			•	
Automatic Local Control Logic	•	•	•						
Improve Safety With Optical Fiber	*	*	*	•	•	•	•	•	•
MOUNTING AND LABELING									
Surface-/Wall-Mount	•	*	•	•		•			•
Rack-Mount	•	*	•		*		*	*	
Panel-Mount	•	*	•		*		*	*	
Projection Panel-Mount		*			*		*	*	
User-Configurable Labels		•			•		•	•	
Screw-Terminal Connectorized® Blocks					•		•	•	
NUMBER OF INPUT/OUTPUT CHANNELS									
Digital Inputs (DI) Base	0	2	32	8	8	8	8	8	1
DI Maximum	1,286	34	48	8	8	8	8	8	1
Digital Outputs (DO) Base	1	3	16	8	8	8	8	8	
DO Maximum	864	35	32	8	8	8	8	8	
DC Analog Inputs (AI) Maximum	256	32							
DC Analog Outputs (AO) Maximum	128	4							
AC Current Inputs/CT Maximum	64	7							
AC Voltages/VT Maximum	64	3							
DC Analog RTD Inputs Maximum		10							12
DC Analog Thermocouple Inputs Maximum		10							
SERIAL COMMUNICATIONS PROTOCOLS									
SEL Mirrored Bits®	•	•	•	•	•				
SEL Fast Messages	•	•	•			•	•		•
Modbus® RTU	•	•	•						
IEEE C37.94								•	
DNP3	•	*	•						
IEC 60870-5-101	•								
IEEE C37.118 Client	•								
SES-92 Server	•								
LG 8979	•								
ETHERNET COMMUNICATIONS PROTOCOLS									
Modbus TCP	•	*	•						
DNP3 LAN/WAN	•	*	•						
Telnet	•	*	•						
FTP	•	*	•						
IEC 61850 MMS		*	*						
IEC GOOSE	*	*	*						
EtherCAT®	•								
IEC 60870-5-104	•								
Lightweight Directory Access Protocol (LDAP)	•								
IEEE C37.118 Client/Server	•								

• Standard Feature * Model Option A With compatible SEL fiber-optic transceiver or interface option at relay or processor

INDUSTRIAL PLANT MONITORING

Implement automatic control or data acquisition using high-speed, deterministic logic capabilities available in SEL processors and controllers. Sense temperatures, fluid levels, pressures, or valve position with each input card.

OUTDOOR BREAKER CONTROL

Monitor and control power system data from the circuit breaker cabinet. Show channel activity, device status, or the result of logic calculations on front-panel LEDs and a customizable LCD display.

PUMP CONTROL AND MONITORING

Manage fluid levels, pump operations, and pump house security. Enable coordinated control and HMI monitoring of wells, lift stations, booster stations, or RTUs through SEL wired and wireless communications technologies.

Axion HMI Screen

SEL-2240

Provide industrial process and other system apparatus with secure, reliable, and scalable control and communications capabilities using the SEL-2240 Axion®.

SEL-3355

Seamlessly and flexibly concentrate data, convert protocols, and apply the SEL-3355 Computer by using a wide range of factory or user-installed data concentration and protocol conversion software.

SEL-2411

The SEL-2411 Programmable Automation Controller (PAC) offers flexible I/O for automatic control, SCADA, station integration, remote monitoring, and plant control systems.

SEL-2440

Apply the SEL-2440 DPAC Discrete Programmable Automation Controller for utility-grade I/O, powerful processing, flexible communications, and microsecond timing.

SEL-2595

Securely transfer teleprotection signals through the high-speed, IEEE C37.94 optical-fiber interface with the SEL-2595 Teleprotection Terminal.

SEL-2505/2506

Reduce operating time, add self-wiring, and simplify wiring for auxiliary inputs and outputs with the SEL-2505 Remote I/O Modules and SEL-2506 Rack-Mount Remote I/O Module.

SEL-2515/2516

Extend contact I/O for SEL information processors with the SEL-2515 Remote I/O Module and the SEL-2516 Rack-Mount Remote I/O Module. Monitor the status of external contacts transmitted via SEL Fast Meter messages to a communications processor, and control contact outputs using SEL Fast Operate commands.

SEL-2600

Acquire and transmit resistance temperature detector (RTD) thermal data from transformers, motors, generators, and other system apparatus with the SEL-2600 RTD Module.

INFORMATION PROCESSORS

	SEL-3530	SEL-3530-4	SEL-3355	SEL-2240	SEL-3505
APPLICATIONS					
Collect, Scale Meter Data	•	•	*	•	•
Collect Targets, Contact Input Status, Fault Location	•	•	*	•	•
Enable Fiber-Optic Links	•	•	•	•	•
Control Through IED Outputs	•	•	*	•	•
Extract Data From Non-SEL IEDs	•	•	*	•	•
Forward Information to Maintenance Databases	•	•	*	•	•
Accept IRIG-B Time Synchronization	•	•	•	•	•
Provide IRIG-B Time Synchronization	•	•	•	•	•
Concentrate IED Data for:					
Distributed Control System (DCS)	•	•	*	•	•
SCADA Master or RTU	•	•	*	•	•
Local or Remote HMI	•	•	*	•	•
Transparent "Port Switch"	•	•	*	•	•
Users Can Install Windows®-Based Applications			•		
Web Server HMI	*	*	3	*	
FEATURES					
Protocol Redundancy	•	•		•	•
Primary and Standby LAN Support	•	•	•	•	•
Programmable Logic Functions	•	•	*	•	•
Upgrade Firmware Through Port	•	•	•	•	•
Optoisolated Inputs/Programmable Outputs	*	•		*	*
Telephone Connection Internal Modem					*
Rack-Mount or Panel-Mount Hardware	*	*	*	*	*
IEC 61131 Logic Engine	•	•	3	•	•
Cybersecurity Management	•	•	•	•	•
Real-Time Operating System	•	•		•	•
SERIAL PORT PROTOCOLS					
SEL Mirrored Bits® Communications	•	•		•	•
Client					
DNP3	•	•	*	•	•
Modbus® RTU	•	•	*	•	•
Modbus Subset for IEDs					
IEC 60870-5-103			*		
Harris 5000/6000			*		
LG 8979	•	•	*	•	•
SES-92			*		
Itron® MV-90® Master Subset for Meters	*f*	*f*		*f*	*f*
2179 for Tap-Changer Control	*f*	*f*		*f*	*f*
SEL Fast Messages, Interleaved With ASCII	•	•	*	•	•
SEL Synchrophasors	*f*	*f*		*f*	*f*
Server					
DNP3	•	•	*	•	•
Modbus RTU Binary	•	•	*	•	•
IEC 60870-5-101	•	•	*	•	•
Recon 1.1			*		
LG 8979	•	•	*	•	•
Harris 5000/6000			*		
SES-92	•	•	*	•	•
CDC Type 2 Byte			*		
GE-TAC/BE-TAC 7020			*		
Conitel 2020 Byte			*		
NETWORK PROTOCOLS					
Ethernet	•	•	•	•	•
Telnet	•	•	•	•	•
FTP			•		
DNP3 LAN/WAN	•	•	*	•	•
Modbus TCP	•	•	*	•	•
IEC 61850/UCA2			*		
IEC 61850 MMS	*	*	*	*	
IEC 61850 GOOSE	*	*	*	*	*
IEC 60870-5-104	•	•	*	•	•
OPC Client/Server			*		
IEEE C37.118 Client/Server	•	•		•	•
Modbus Plus®					
Lightweight Directory Access Protocol (LDAP)	•	•	3	•	•
EtherCAT®	•	•		•	

DYNAMIC LOAD SHEDDING

Automatically shed loads within industrial power systems in response to a variety of conditions. Based on system state, application-specific load-shedding instructions are dynamically loaded into the SEL-2100 Logic Processor, which uses the instructions to populate an advanced application crosspoint switch matrix. As the system state changes, the SEL-2100 sends trip commands based on the type of contingency and prioritization in the load-shedding instructions.

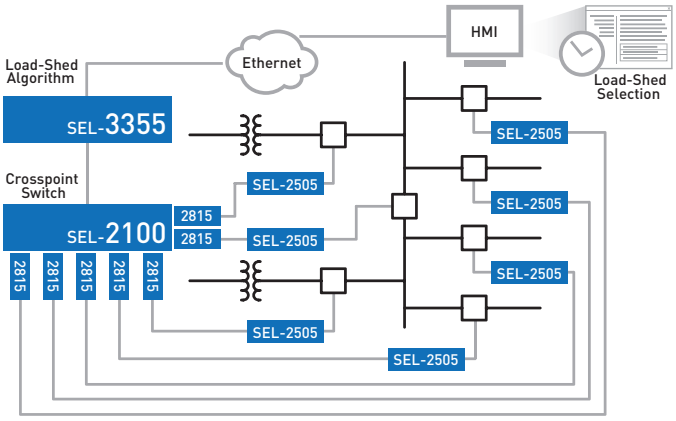

SUBSTATION HUMAN-MACHINE INTERFACE (HMI)

Provide cost-effective local and remote monitoring and control for substations and other processes by installing the optional web-based HMI, available for the SEL-3530 Real-Time Automation Controllers (RTACs) and SEL-2240 Axion®. acSELerator Diagram Builder™ Software easily maps the RTAC tag database to reduce screen development time.

EVENT COLLECTION

Automatically detect, filter, and collect event data from connected SEL relays. Fault location, fault current, and other data are populated into tags for easy retrieval through SCADA protocols. Automatically collect events through the RTAC with acSELerator Team® SEL-5045 Software.

• Standard Feature
* Model Option
f This function may be created using settings
1 With Ethernet Option
2 With Modbus Plus Option
3 Install and configure Windows applications

SEL-3530/3530-4

Apply the SEL-3530 Real-Time Automation Controller (RTAC) to integrate station control and to report through one reliable system.

SEL-3505/3505-3

Add powerful automation, reporting, and control to low-power, limited-space industrial applications with the SEL-3505 Automation Controller.

SEL RTAC HMI

The RTAC web-based human-machine interface (HMI) provides quick and easy access to system statuses.

SEL-3355

Seamlessly and flexibly concentrate data, convert protocols, and apply the SEL-3355 Computer with wide range of factory- or user-installed data concentration and protocol conversion software.

COMPUTING

	SEL-3355	SEL-3360E	SEL-3360S
APPLICATIONS			
Computing Applications in Harsh Environments	•	•	•
Run Multiple Applications Simultaneously	•	•	•
Install Third-Party Application Software	•	•	•
Embed Into Automation and Monitoring Systems	•	•	•
Human-Machine Interface (HMI)	•	•	•
Distributed Control Systems (DCS)	•	•	•
SCADA Master or RTU	•	•	•
Security Gateway to Help Satisfy NERC CIP Requirements	•	•	•
Network Monitoring and Intrusion Detection	•	•	•
Localized Read-Only Domain Controller	•	•	•
Virtualization Server	•	•	•
Engineering Access Point	•	•	•
IRIG-B Time Distribution and NTP Conversion	•	•	•
Video Surveillance Control and Archiving	•	•	•
Physical Security Monitoring and Notification	•	•	•
OPERATING SYSTEMS (OS)			
None	•	•	•
Windows® 7	*	*	*
Windows Server® 2012	*	*	*
Linux®	*	*	*
Custom OS	*	*	*
PRE-INSTALLED SOFTWARE			
SEL acSELerator® Software	*	*	*
SEL synchroWAVe® Software	*	*	*
McAfee Whitelist Antivirus	*	*	*
IEC-61850 MMS/GOOSE OPC Server	*	*	*
HARDWARE			
Intel® Core™ i7-3555LE Dual-Core 2.5 GHz 64-Bit CPU, –40° to +75°C (–40° to +167°F) Ambient Operating Temperature Range	•	•	•
Intel Core i7-3612QE Quad-Core 2.1 GHz 64-Bit CPU, –40° to +60°C (–40° to +140°F) Ambient Operating Temperature Range	*	*	*
4 GB DDR3 ECC PC3-10600 System Memory	•	•	•
Up to 16 GB DDR3 ECC PC3-10600 System Memory	*	*	*
Dual Independent Video Displays (DVI-I, DVI-D, DisplayPort)	•	•	•
HD Audio Ports, Line In, Line Out, Microphone	•	•	•
Six USB Ports, USB 2.0 Compliant, 800 mA Current Limit Each	•	•	•
Two 10/100/1000 Mbps Independent Copper Ethernet Ports	•	•	•
Two EIA-232 Serial Ports, DB-9 Connectors, 300 to 115000 bps	•	•	•
19" Rack-Mount Chassis	•		
Industrial Wall-Mount Chassis		•	•
PCI/PCIe Expansion Slots	5	2	0
Additional EIA-232/-422/-485 Serial Ports, RJ45 Connectors, 300 to 921000 bps, IRIG-B Inputs/Outputs, +5 Vdc Power Via PCIe Cards	24	12	0
Additional 10/100/1000 Mbps Ethernet Ports, Copper RJ45, or Fiber-Optic SFP LC Connectors Via PCIe Cards	8	8	0
Solid-State Drives (2.5" SLC SATA II, 30–250 GB Drives)	4	2	2
Internal 120/230 Vac, 125/250 Vdc Power Supply	•	•	
Secondary Internal 120/230 Vac, 125/250 Vdc Power Supply	*		
Hot-Swappable Power Supplies	•		
External 12 Vdc Power Supply			*
Watchdog Processor	•	•	•
Alarm Contact and Alarm LED	•	•	•
Three Programmable Auxiliary Bicolor LEDs	•	•	•
Intel Active Management Technology (AMT) v8.0	•	•	•
Trusted Platform Module (TPM) v1.2	•	•	•

• Standard Feature * Model Option

INFORMATION PROCESSOR: DATA CONCENTRATOR/ PROTOCOL CONVERTER

Seamlessly and flexibly concentrate data, convert protocols, and apply the SEL-3355 Computer with a wide range of factory- or user-installed data concentration and protocol conversion software.

ENGINEERING WORKSTATION

Choose the SEL-3355 as your engineering workstation platform, and get a reliable and robust system suitable for the harshest environments. View and change intelligent electronic device (IED) settings, view report and event data, and gain easy access to diagram drawings and documents on site. Access the engineering workstation remotely and securely using the Microsoft® Windows® Remote Desktop tool or Secure Shell (SSH), or out-of-band with Intel® vPro™ Active Management Technology (AMT) KVM over IP.

INDUSTRIAL PROCESS CONTROL PLATFORM

The SEL-3355 is the perfect candidate for any industrial control system requiring the power of a rugged, reliable, highly available computer. Implement your control system with your choice of SCADA software. With ample communications ports (serial or Ethernet), the SEL-3355 is also ideal for distributed control systems.

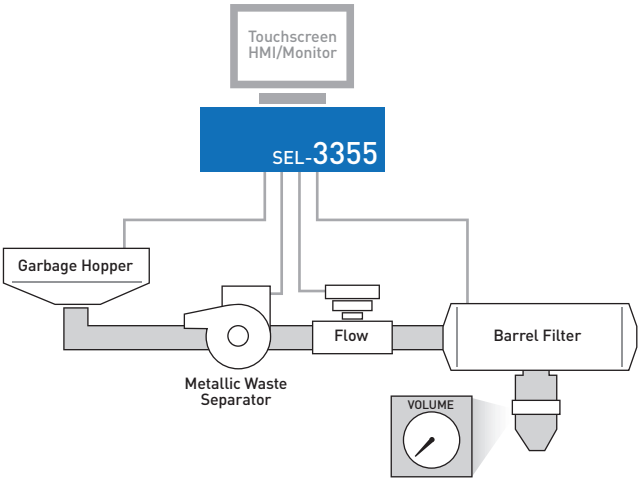

SEL-3355

Apply the rugged SEL-3355 Computer to develop an application-specific system for harsh environments in commercial, industrial, or government systems.

SEL-3360S/3360E

The SEL-3360S/3360E Industrial Wall-Mount Computers match the power, ruggedness, and reliability of the SEL-3355 Computer and are a perfect solution for limited-space applications.

RELIABLE, AVAILABLE, AND SERVICEABLE

SEL computers are server-class computers with respect to RAS—reliability, availability, and serviceability. Industrial computer systems need to be always available and easy to service when necessary. The SEL-3355 satisfies these server-class requirements with the following:

Reliability—SEL designs, manufactures, and tests every highly dependable computer in-house. Our computing systems currently have a mean time between failures (MTBF) of over 100 years, ten times higher than that of the typical industrial computer. And our computers are backed by our ten-year, no-questions-asked warranty.

Availability—Designed to keep your system operational for longer periods, the SEL-3355 comes with an option for dual power supplies and includes an Intel multicore processor and Intel's AMT.

Serviceability—AMT allows diagnostic logs to be viewed for evaluation and service even when the unit is powered off. Our computers also feature SEL's unique system monitor (SysMon) with a watchdog timer. Users can reboot into another operating system (OS) for diagnostics or to batch software, and then bring the system back online, all remotely. Additionally, SEL's SysMon logs computer events specific to the installed system to aid in faster recovery. Use AMT's KVM-over-IP feature to get hands-on help and guidance from an expert back at the central office, which can speed up serviceability.

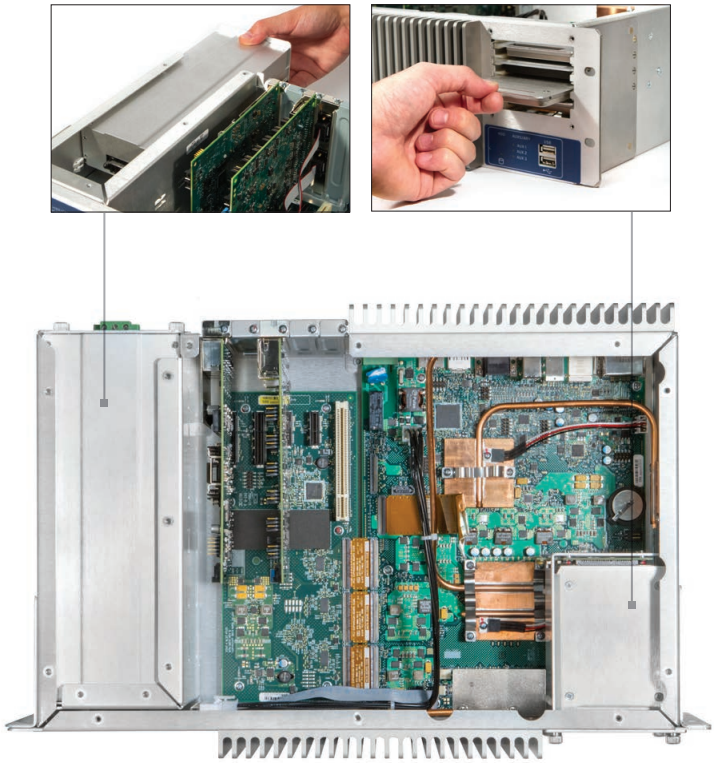

Scan the QR code to watch the Computer video series.

SECURE COMMUNICATIONS

WAN AND LAN	SEL ICON	SEL-3620	SEL-3622	SEL-3610	SEL-2725	SEL-2730M
APPLICATIONS						
SONET WAN	•					
Ethernet LAN	•	•	•	•	•	•
Precise Time Distribution	•	•	•	•		
Engineering Access Control	•	•	•			
Connect Multiple Wired-Ethernet Devices to Network	•	•	•	•	•	•
Convert Wired 10/100BASE-T Ethernet to Fiber-Optic 100BASE-FX Ethernet	•	•	•	•	•	•
Convert Serial Links to Ethernet Links		•	•	•		
FEATURES						
Encryption	•	•	•	•		
Session Authentication	•	•	•	•		
Message Authentication	•	•	•	•		
User-Based Accounts	•	•	•	•		•
Centralized Authentication Via LDAP		•	•	•		•
Centralized Authentication Via RADIUS		•	•			
Stateful Deny-by-Default Firewall		•	•			
Import/Export Configuration Files		•	•	•		•
Virtual Private Network (VPN)		•	•			
Syslog Logging	•	•	•	•		•
Network Management System Software	•					•
GPS Receiver	•					
Real-Time Latency Monitor	•					
Spanning Tree Protocol (STP)				•		•[1]
Virtual Local-Area Networks (VLANs)	•	•	•	•		•
Ethernet Class of Service (CoS)	•					•
ETHERNET PORTS, CONNECTOR	**QUANTITIES**					
Copper 10BASE-T Only, RJ45						
Copper 10/100BASE-T, RJ45	0–16[2]	3	0–2	3	4 or 3	0–16[3]
Fiber-Optic 100BASE-FX, LC		2	0–2	2	1 or 2	0–16[3]
Copper Gigabit (GigE), LC						4
Fiber-Optic Gigabit, LC	2					0–4[4]
SFP Cages	2–6[5]					4[4]

[1]SEL-2730M supports STP plus IEEE 802.1D-2004 Rapid Spanning Tree protocol (RSTP).

[2]SEL ICON has the option to support up to 16 Ethernet ports using 8-port Ethernet Access Modules.

[3]SEL-2730M base configuration supports sixteen 10/100BASE-T copper ports, with the option to substitute 100BASE-FX fiber-optic ports in groups of four.

[4]SEL-2730M base configuration includes 4 copper GigE ports and 4 SFP cages for optional fiber-optic GigE ports.

[5]SEL ICON uses SFP cages for SONET and GigE fiber-optic interfaces.

WIRELESS AND WIRED SERIAL COMMUNICATIONS	SEL-2924	SEL-2925	SEL-3025	SEL-3031	SEL-3060
APPLICATIONS					
Protect SCADA Links From Cyber Intruders			•	*†	•
Protect Engineering Access Links From Cyber Intruders			•	*†	•
Serial User-Based Access Control			•		
Wireless Point-to-Point Link				•	•
Wireless Point-to-Multipoint Radio Link				•	•
Permanent Wireless Cable Replacement		•		•	•
Temporary Wireless Cable Replacement	•				
Connect to EIA-485 Network				*	
Modem to Connect to Telephone Network					
Electrically Isolate EIA-232 Links	•	•		•	
FEATURES					
Low Latency for Teleprotection				•	
SEL Mirrored Bits® Communications-Compatible				•	
Modbus®-Compatible			•	•	•
Fast for SCADA Applications		•	•	•	•
Compatible With DNP3	•	•	•	•	•
Encryption	•	•	•	*†	•
Session Authentication	•	•	•	*†	
Message Authentication	•	•	•		
User-Based Accounts			•		
Logging With Syslog			•		
FIPS 140-2 Level 2 Validated			•	*†	
915 MHz ISM Band Radio (Unlicensed)				•	•
2.4 GHz ISM Band Radio (Unlicensed)	•	•			•
Import/Export Configuration Files			•		
Centralized Configuration Management			•		
EIA-232 Port (Quantity)	1	1	2	3	
Wired EIA-485 Port (Quantity)				*†	
SETUP METHOD					
USB Port				•	
Secure Ethernet or Secure Serial Link			•		•
Control (DIP) Switches	•	•			
Secure Wireless Link	•	•			

• Standard Feature * Model Option
† With SEL-3044 Encryption Card Option

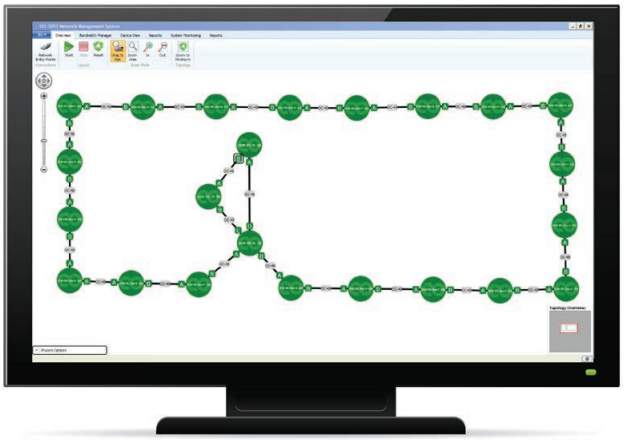

ICON network management HMI.

SEL ICON®

The SEL ICON Integrated Communications Optical Network is designed and built to address demanding communications needs and operate in extreme environments, including utilities, light-rail and highway transportation, manufacturing, petrochemical plants, pipelines, or anywhere reliable communication is required to support critical applications.

SEL-2730M

Reliably control and monitor your plant and substation networks with the SEL-2730M Managed 24-Port Ethernet Switch.

SEL-2725

Easily connect devices to Ethernet networks with the SEL-2725 Five-Port Ethernet Switch.

SEL-3620/SEL-3622

The SEL-3620 Ethernet Security Gateway and SEL-3622 Security Gateway protect site-to-site communications with an IPsec VPN and secure your private networks with a substation-tough stateful firewall.

SEL-3610

Add up to 17 tough serial ports via Ethernet links with the SEL-3610 Port Server.

SEL-3025

The SEL-3025 Serial Shield™ protects serial communications with bump-in-the-wire security and strong, authenticated access controls.

SEL-3060

The SEL-3060 Ethernet Radio provides industrial applications, distribution automation, SCADA, engineering access, and substations with low-cost, low latency, real-time data collection and communications.

SEL-3031

Wirelessly monitor and control remote systems using three secure data links with the SEL-3031 Serial Radio Transceiver in point-to-point or point-to-multipoint mode.

SEL-2925

Communicate securely with protection and control devices using the SEL-2925 BLUETOOTH® Serial Adapter.

FIBER-OPTIC DEVICES

	SEL-2800	SEL-2810	SEL-2812	SEL-9220	SEL-2814	SEL-2815	SEL-2820	SEL-2824	SEL-2829	SEL-2830	SEL-2831	SEL-2894	SEL-3094	SEL-2126
CONNECTOR AND OPTICS														
V-System®, 650 nm Wavelength	•	•					•							
ST®, 850 nm Wavelength			•	•	•	•		•				•	•	•
ST, 1300 nm Wavelength									•	•				
ST, 1550 nm Wavelength											•			
FIBER COMPATIBILITY														
200 µm Core Multimode Fiber (SEL-C805)	•	•	•	•	•	•	•	•						•
50 or 62.5 µm Core Multimode Fiber (SEL-C807, -C808)			•	•	•	•		•				•	•	•
9 µm Core Single-Mode Fiber (SEL-C809)									•	•	•			
ELECTRICAL														
EIA-232 Asynchronous Serial Data	•	•	•		•	•			•	•		•	*	
EIA-485 Asynchronous Serial Data				•			•	•					*	
EIA-422, EIA-485 Synchronous Serial Data													*	
ITU-T G.703 Synchronous Serial Data													*	
DTE/DCE Switch					•	•			•	•			•	
IRIG-B Transfer With Data		•	•	•										
Hardware Flow Control Lines With Data					•			•						
Power From Electrical Port Pins	•	•	•	•	•	•			•	•	•	•		
External Power Jack or Terminals					•		•	•				•	•	
DISTANCES														
Minimum	1 m	1 m	1 m	1 m	1 m	2 km	1 m	1 m	1 m	16 km	16 km	1 m	1 m	1 m
Maximum	500 m	500 m	4 km	4 km	4 km	15 km	500 m	4 km	23 km	80 km	110 km	2 km	2 km	2 km

• Standard Feature * Model Option

SEL-9220

Apply the SEL-9220 Fiber-Optic Adapter for SEL-300 Series Relays to convert the EIA-485 port to a fiber-optic interface.

SEL-2894

Use the SEL-2894 Interface Converter to interface asynchronous EIA-232 devices with synchronous networks through IEEE C37.94 compliant multiplexers or transfer switches.

SEL-2126

Transfer multiple communications protocols carried on the IEEE C37.94 standard fiber-optic interface. The SEL-2126 Fiber-Optic Transfer Switch provides the only total fiber-optic rerouting solution in the industry.

SEL-3094

Apply the SEL-3094 Interface Converter to link older relays with ITU-T G.703, EIA-422, EIA-485, or EIA-232 electrical interfaces to IEEE C37.94 compliant multiplexers or transfer switches.

SEL-2800/2810

Establish EIA-232 communication between devices over a fiber-optic link, 1 to 500 meters long, by connecting a pair of SEL-2800 or SEL-2810 Fiber-Optic Transceivers and a multimode fiber-optic cable with V-pin connectors.

SEL-2812, SEL-2814, SEL-2815

Transfer data at rates up to 115 kbps with the SEL-2812 or SEL-2814 Fiber-Optic Transceivers, or up to 40 kbps with SEL-2815 Fiber-Optic Transceivers. The SEL-2812 transfers data and IRIG-B time codes, and the SEL-2814 transfers data and hardware flow control signals.

SEL-2829, SEL-2830, SEL-2831

Connect a pair of SEL-2829, SEL-2830, or SEL-2831 Fiber-Optic Transceivers and a single-mode fiber-optic cable with ST® connectors for EIA-232 communication between devices over a fiber-optic link.

SEL-2820/2824

Connect to two- or four-wire EIA-485 network segments with SEL-2820 Fiber-Optic V-Pin and SEL-2824 Fiber-Optic ST® Transceivers and a multimode fiber-optic cable.

PRECISE TIME

	SEL-2401	SEL-2404	SEL-2407®	SEL-2488	SEL-3400	SEL-3401	SEL ICON®
APPLICATIONS							
Substation Time Automation		•	•	•	•		•
Industrial Time Automation	•	•	•	•	•		•
Synchrophasor Time Standard	•	•	•	•	•		•
Control Room Viewing		•			•	•	
Recloser Timing Source	•		•				
IEEE 1344/IEEE C37.118 Time Quality Testing	•	•	•	•	•		•
Time-Synchronized Event Reporting	•	•	•	•	•		•
Source for Time-Tagged SER	•	•	•	•	•		•
Large-Distance Viewing 61 m (200 ft)		•				•	
TIMEKEEPING AND DISTRIBUTION							
Meets Synchrophasor Accuracy Requirements	•	•	•	•			•
Demodulated IRIG-B Output(s)	•	•	•	•	•	*	•
Modulated IRIG-B Output(s)			•	•			
GPS Satellite Tracking	•	•	•	•			•
Demodulated IRIG-B Input					•	•	•
Synchronized Pulse Output	•	•	•	•			
FEATURES							
High-Gain GPS Antenna and Feed Line	•	•	•	*			*
Large, 76.2 mm (3.0 in) Tall LED Display		•				•	
14 mm (0.56 in) Tall LED Display			•	•	•		
Meets IEEE C37.90 and IEC 60255 Surge and Environmental Standards	•	•	•	•	•	•	•
Force Time Quality Mode (For Testing)			•	•			•
Rack-Mount, Panel-Mount, or Wall-Mount Hardware	•	•	•		•	•	
Universal Power Supply			•	•	•		•
Power Over Ethernet (PoE) Power Sourcing Equipment (PSE)							•
SERIAL PORT PROTOCOLS							
ASCII Commands and Reports	•	•	•				
Fiber Communications Port			*				

• Standard Feature * Model Option

TIME SYNCHRONIZATION WITH THE SEL-2407

Apply the SEL-2407® Satellite-Synchronized Clock in a substation to synchronize relays, phasor measurement units, Sequential Events Recorders, information processors, and other devices. Synchronize up to 120 devices via six demodulated IRIG-B output ports. The SEL-2407 also has an additional port for distributing modulated IRIG-B.

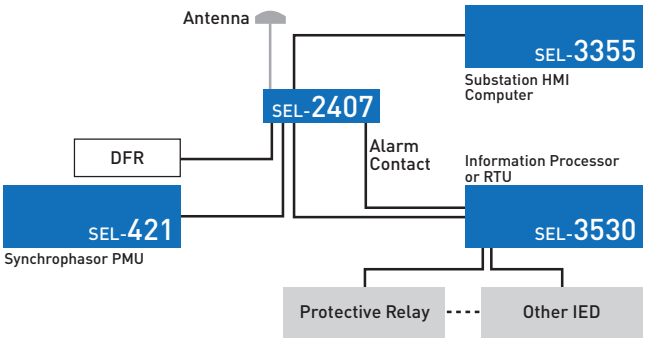

PRECISE TIME DISTRIBUTION WITH THE ICON® AND SEL-3400

Distribute precise time throughout a wide-area network (WAN) with the SEL ICON Integrated Communications Optical Network, and use the SEL-3400 IRIG-B Distribution Module for convenient distribution within racks or panels. The ICON's built-in GPS receiver is backed up by an internal Stratum 3 source in cases of GPS unavailability or compromise. The SEL-3400 receives a precise time signal from an ICON network, or other precise time source, and distributes time to up to 240 devices via 12 demodulated IRIG-B outputs.

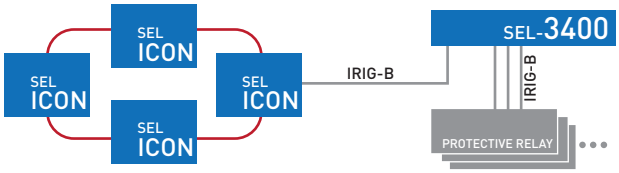

SEL-2401

Apply the low-priced SEL-2401 Satellite-Synchronized Clock everywhere you can use accurate time.

SEL-2404

Apply the SEL-2404 Satellite-Synchronized Clock with relays, event recorders, and information processors in applications requiring accurate time and highly visible time indication.

SEL-2407®

Apply the SEL-2407 Satellite-Synchronized Clock with relays, Sequential Events Recorders, communications processors, and other devices for precise alignment of time-sensitive information.

SEL-2488

The SEL-2488 Satellite-Synchronized Network Clock provides advanced time synchronization capabilities for demanding applications and larger substations with broad requirements for precise time.

SEL-3400

Provide time synchronization to up to 240 devices via 12 demodulated IRIG-B outputs with the SEL-3400 IRIG-B Distribution Module.

SEL-3402

Install the SEL-3402 Network Display Clock to improve productivity, using a large time display in control rooms, factories, and other time-critical locations.

ANNUNCIATION AND NOTIFICATION

	SEL-2522	SEL-2523	SEL-2533	SEL-3010
APPLICATIONS				
Local Visual Indication	•	•	•	
Remote Visual Indication		•	•	
Local Audible Indication	•	•	•	•
Remote Audible Indication	•	•	•	•
Loudspeaker Messages				•
Telephone Dial-Out Messages		•	•	•
Local SELogic® Control Equations and Time Tagging		•	•	
MOUNTING AND LABELING				
Surface-/Wall-Mount				•
Rack-Mount	*	*		•
Panel-Mount	*	*	•	
Projection Panel-Mount				
User-Defined Slide-In Labels	•	•	•	
INPUTS, OUTPUTS, AND HMI				
General-Purpose Digital Inputs	36	42	14*	
Acknowledge, Reset, Test Digital Inputs	3	6	4*	
General-Purpose Digital Outputs	1	11	14*	
Alarm Digital Output	1	1	1	
General Display LEDs/Windows	36	36	10	
Enabled LED	1	1	1	1
OTHER COMMUNICATION/STATUS LEDS				
Pushbuttons	3	4	4	
Base Serial Ports		3	3	1
Optional Additional EIA-232 or EIA-485 Port		1	1	
IRIG-B Time Input		1	1	
ISA Annunciation Alarm Sequence Choices	2	6	All	
SERIAL COMMUNICATIONS PROTOCOLS				
SEL Mirrored Bits® Communications		•	•	
SEL Fast Messages		•	•	
Send SEL Messenger Points		•	•	
Receive SEL Messenger Points				•
Modbus® RTU		•	•	
DNP3 Level 2 Outstation		*	*	

• Standard Feature * Model Option

SYSTEM MONITORING

Receive station equipment status information through hard-wired contacts or communications devices to provide a single-point alarm station. Monitor equipment, report on the status of any equipment that has failed, and notify local and remote personnel of current conditions.

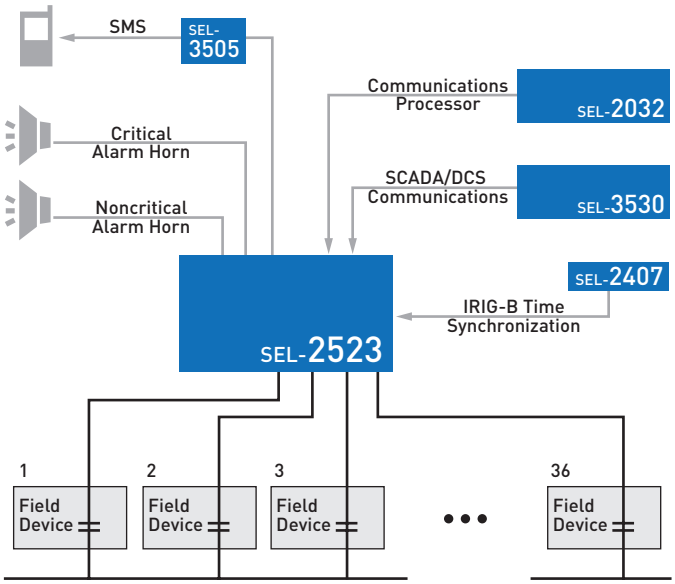

REMOTE ALARM NOTIFICATION

Transmit important system data and alarm information by telephone to on-call operators. Provide on-call response to critical alarms for municipal and industrial sites.

SYSTEM COMMUNICATIONS AND INTEGRATION

Designate up to four high-speed serial ports to communicate with DNP3, Modbus®, or SEL protocols. Support external communications links, including the public switched telephone network for engineering access to dial-out alerts and a private line connection to the SCADA system.

SEL-2523

Provide local and remote notifications with the SEL-2523 Annunciator Panel, including programmable logic and up to four communications ports.

SEL-2533

Use the compact, ten-window SEL-2533 Annunciator to provide local and remote annunciation.

SEL-2522

Apply the SEL-2522 Alarm Panel to easily view the status of alarms and operating events with up to 36 inputs.

SEL-3010

Deliver alarms and event notifications by telephone with the SEL-3010 Event Messenger.

SOFTWARE

	acSELerator QuickSet® SEL-5030 (free)	acSELerator QuickSet SEL-5030 (licensed)	acSELerator Team® SEL-5045
FEATURES			
Create and Edit Device Settings	•	•	
Create and Edit Device Settings Templates		•	
Offline Setting Validation	•	•	
Manage Settings for Multiple Devices	•	•	
Integrated Device Manager	•	•	
Automatic Retrieval, Archiving, and Viewing of Remote Events			•
Transmission Fault Location Calculation			•
Team Sync			•
Security Logs Collection			•
Gather Sequence of Events (SOE) Data			•
Acquire Load Profile Data			•
Develop SELogic® Control Equations	•	•	
Advanced Graphical Logic	•	•	
Simple Integrated Metering and Control HMI	•	•	
Integrated Firmware Manager	•	•	

ACSELERATOR QUICKSET® SEL-5030 SOFTWARE

QuickSet is freely distributed software that provides a powerful and complete solution for device configuration and deployment. After deploying your devices, you can provide automated retrieval and advanced analysis of power system data with acSELerator Team®.

ACSELERATOR TEAM SEL-5045 SOFTWARE

Team is a licensed software tool that you install and configure within QuickSet to seamlessly integrate analysis and reporting into your design and commissioning workflow.

SEL-5030

ACSELERATOR QUICKSET® SOFTWARE

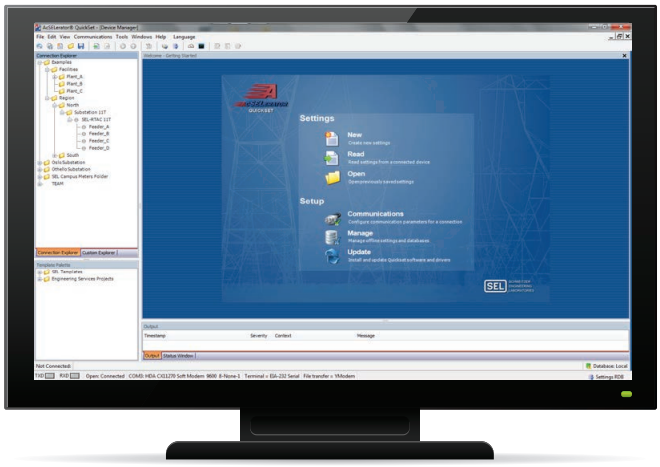

FEATURED APPLICATIONS

Simplified Commissioning—Streamline the configuration and commissioning of supported SEL products with a single software solution. Install one software product rather than many to do the same job.

Economical Software—Choose the most economical software to complete the design, commissioning, and management of SEL devices. ACSELERATOR QuickSet SEL-5030 Software is included at no charge for all supported devices.

Simplified Device and Software Compatibility—Maintain system functionality even when updating firmware or software. QuickSet is backwards- and forwards-compatible for all supported devices. It can be continuously updated, and all device firmware will remain supported and accessible.

System-Wide Device Management—Integrate settings, connection parameters, device-specific information, and related device documentation in one easy-to-navigate location using the Device Manager. Quickly locate important information relating to specific devices to streamline maintenance and support.

Optimal Settings Design—View the logical settings groups presented by QuickSet to quickly identify related device settings. QuickSet automatically verifies these settings to ensure they are in range and permitted.

Reduced Design Time—Generate custom logic with the Graphical Logic Editor (GLE). Simplify logic configuration in supported relays with drag-and-drop tools for creating diagrams and SELOGIC® control equations specific to your application.

Settings Comparison and Conversion—Compare multiple settings files for the same device, and note any differences between the two. Then, confirm or edit the suggested settings conversions before sending those settings to your device.

Device Performance Monitoring—Apply the device human-machine interface (HMI) within QuickSet to manage and monitor system values. Ensure that the device will operate as expected in the application it is designed for.

Motor and Transformer Line Protection—Install a new device by requiring personnel to enter only nameplate data and the ID. QuickSet then calculates settings from the entered data by implementing protection, integration, and I/O assignment settings predetermined in the templates.

Feeder Network Protection and Automation—Enter the ID and load data for each recloser. A QuickSet Design Template then calculates protection and reclosing settings by using standard automatic network reconfiguration and integration settings.

Distance Protection—Create a QuickSet Design Template that applies standards to calculate distance and load encroachment settings. Personnel then enter only the ID, line parameters, and load size for each relay.

Transformer Commissioning—Use the Commissioning Assistant within QuickSet to configure and test transformer settings prior to sending the settings to devices in the field.

FOR COMPLETE INFORMATION, VISIT SELINC.COM/SEL-5030

Simplified Logic Configuration—Make designing custom logic even easier by using the GLE in QuickSet. Similar to the intuitive CAD interface and IEC 61131 function blocks, the GLE provides drag-and-drop ease of use for creating diagrams and SELogic control equations in supported relays. Save or print the diagrams created to provide a permanent engineering record of logic designs.

Centralized Device Information Storage—The Device Manager plug-in includes device settings so that you have one convenient location to view, edit, and save all the pertinent information for your devices. With the Device Manager, you can set up your device connection parameters, including any access and terminating scripts, and define device information, such as specific serial numbers, firmware versions, and passwords. You can also save device-specific documents and edit, save, or apply settings for that device.

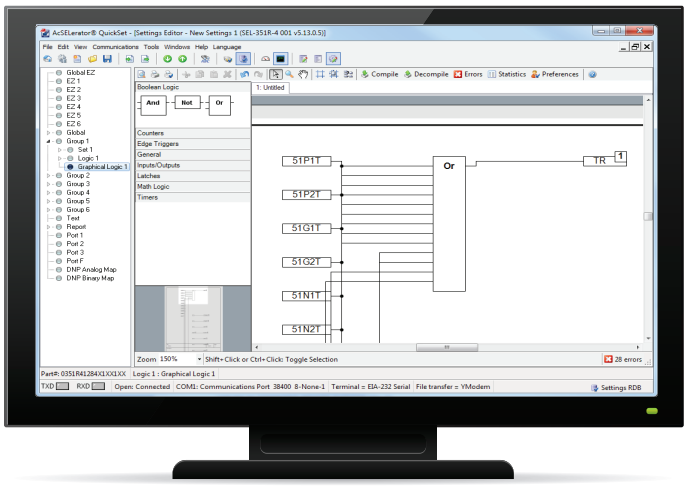

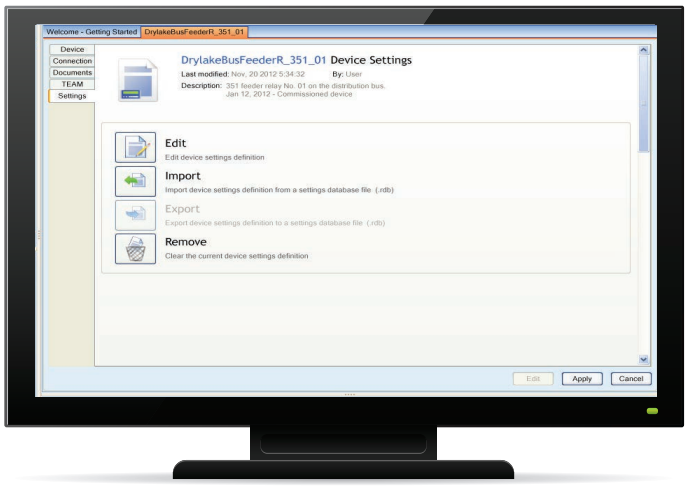

QUICKSET DESIGN TEMPLATES

Quickly and confidently deploy new and existing devices by distributing QuickSet Design Templates for consistent setup and reduced configuration times. Create custom templates to lock settings so they match your standards or to lock and hide unused settings. This simplifies new installations and helps avoid entry errors all at no additional charge.

Each template consists of a device settings file, design template equations, and template settings with customized labels and comments. If your system has multiple devices of the same type, you can apply a design template to set and lock all settings that will remain constant across the devices. It is also possible to create a custom range for each setting to limit the acceptable input values based on your needs.

Additionally, unused settings are hidden to minimize clutter and prevent unnecessary changes. With fewer settings to edit, you save configuration time while maintaining your organization's standards and reducing the likelihood of costly mistakes.

Unlock QuickSet Design Template functionality by purchasing a license. Contact your local customer service representative for more information.

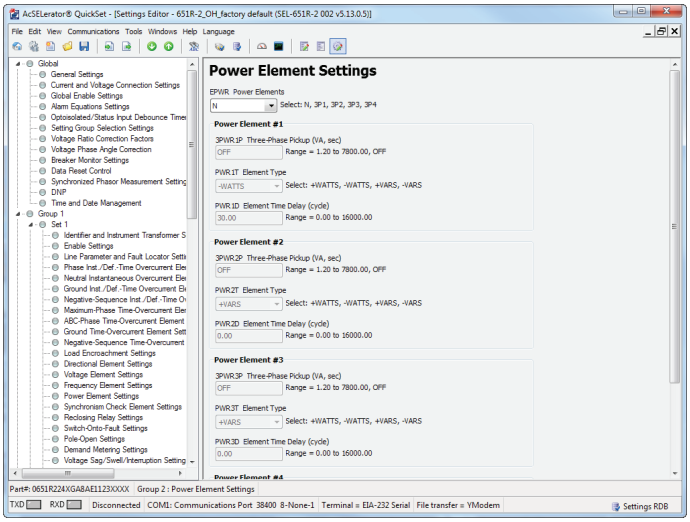

SEL-5045

ACSELERATOR TEAM® SOFTWARE

FEATURED APPLICATIONS

Event Analysis—Accelerate root-cause analysis by automatically collecting events as soon as they occur. Oscillographic event data are beneficial for monitoring the system, fault analysis, and troubleshooting purposes. Quickly identify important events by type, device, location, or time with the event viewer tool.

System Performance Monitoring—Collect Sequence of Events (SOE) data from SEL devices to analyze overall system performance. Along with oscillographic data, SOE data are a key source of information during fault analysis because they provide a time-stamped record of a device's state changes.

Email Notifications—Receive instant alerts via email and text messages when a new event happens.

Power Quality Reports—Aggregate profile data from SEL meters containing energy, demand, voltage, current, harmonic, and frequency trends that can offer useful quality and billing information.

Transmission Fault Location—Determine accurate fault location to pinpoint where a fault has occurred, and quickly restore service. Team Transmission Fault Location (TFL) uses a two-terminal fault location method based on event information that relays collect at the transmission line's end terminals.

Data Redundancy and Transport—Synchronize information between several Team stations and locations using Team Sync.

Password Management—Integrate Team with SEL's security products (e.g., SEL-3620 Ethernet Security Gateway and SEL-3025 Serial Shield™) for password management and security log collection.

FOR COMPLETE INFORMATION, VISIT SELINC.COM/SEL-5045

ACCELERATE ROOT-CAUSE ANALYSIS

Whenever an event occurs, an SEL relay generates and stores an event report. By setting up a job in TEAM, you can retrieve the event data from each device and store this information in the central ACSELERATOR® Database for viewing and analysis. Event reports can then be grouped and associated with specific incidents, such as a windstorm. The built-in filter options enable selection and fast analysis of event data.

Predefined jobs for SEL devices make report collection easy, and multiple devices can be assigned jobs in a single step. TEAM can collect a variety of event report file types, including SEL CEV, COMTRADE, and GE Modbus®. TEAM can also export any event data in COMTRADE format for further analysis as well as export event summaries in spreadsheet, HTML, and other formats.

IMPORT LOAD PROFILE DATA FROM SEL METERS

When serving a large metered area, such as a dense industrial zone, load profile data containing energy, demand, voltage, current, harmonic, and frequency trends can offer useful quality and billing information. TEAM Profile provides automatic collection and viewing of these data, which you can use to create and define any number of reports with TEAM's customized Microsoft® Excel® templates.

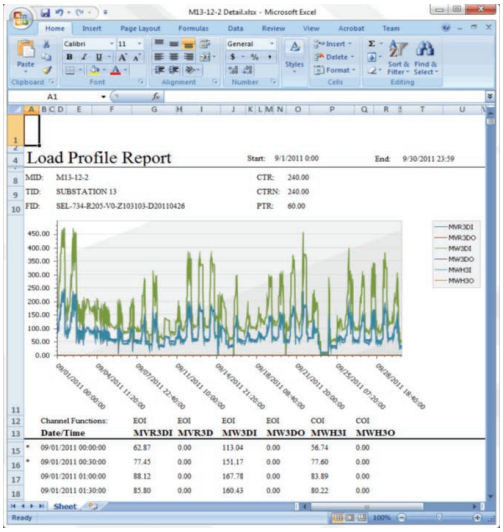

NEVER LOSE EVENT DATA

Some TEAM installations involve a single master station, while others include separate installations at multiple locations. However you have your system set up, data backup is important—and TEAM Sync is designed to meet every customer's needs with stability and high performance. TEAM Sync is a service that pushes data to another station on demand or at set intervals. TEAM Sync is a safe, effective, and cost-saving option for automated data redundancy and transport.

FAULT INDICATORS AND SENSORS

FAULT INDICATOR AND SENSOR APPLICATIONS

SEL fault indicators improve safety and system reliability by helping to identify fault locations faster. Compact construction simplifies installation, with strong clamping mechanisms to fit different conductor sizes. Choose from overhead and underground models with a variety of display options.

SEL fault indicators sense the magnetic field produced by current flowing through a conductor. When fault current passes through the fault indicator, the fault indicator "trips," indicating a fault. Because SEL offers a variety of fault indicator displays, the trip can be indicated by a reflective target, flashing light, or combination of the two display types. The Tamperproof Bolt Display, read by a compass-like tool, and RadioRANGER® Remote Fault Reader provide other display options.

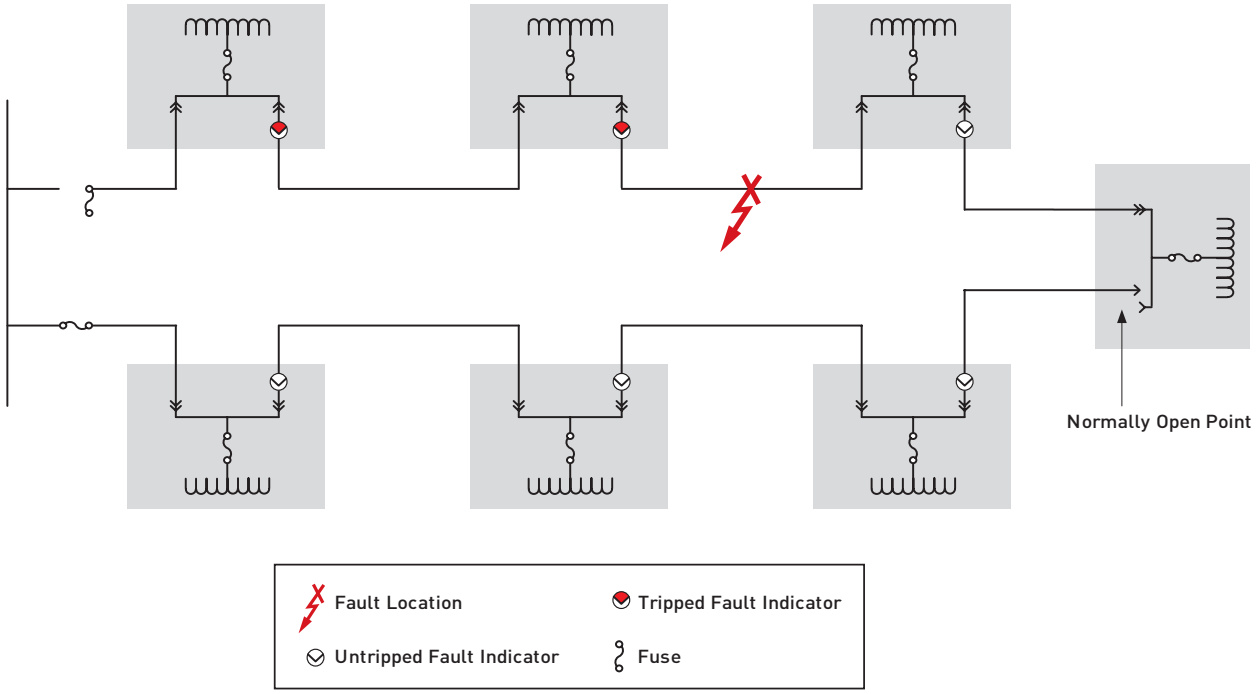

Line crews find the location of faults by isolating the section of line between the last tripped (red) fault indicator and the first untripped (white) fault indicator.

UNDERGROUND

In underground applications, a utility usually places a fault indicator on each primary cable. If a fault causes a fuse to operate, the indicators upstream of the fault will trip and the indicators downstream of the fault will remain in the untripped position. As a result, the utility can easily identify the faulted section of cable without going through a time-consuming re-fuse and sectionalize process.

Underground applications include subsurface or pad-mounted transformers, subsurface or pad-mounted switchgear and sectionalizing cabinets, junction boxes, and splices. An auxiliary contact option provides SCADA compatibility.

The RadioRANGER Wireless Fault Indication System, designed for underground vault applications, uses radio frequency to communicate fault status to a handheld Remote Fault Reader.

OVERHEAD

When a fault occurs on an overhead system, the easy-to-spot displays on the SEL fault indicators lead the line crew to the faulted section of line.

Overhead applications include unfused taps, long feeders with midline reclosers or sectionalizers, overhead-to-underground transitions, and feeders that experience recurring faults.

Applying fault counters and timed reset fault indicators in areas affected by momentary outages and flickering lights is an efficient means of identifying the location of temporary faults. This application of fault indicators provides utilities with the information to resolve these disruptions. Using fault indicators reduces costs to utilities and their customers, and improves utilities' reliability indices.

OVERHEAD AUTORANGER®

The AR360—Overhead AutoRANGER indicates permanent and temporary faults with the 360° visibility intelligent display.

UNDERGROUND AUTORANGER

The AR-URD—Underground AutoRANGER is available with remote displays.

TEST POINT RESET FAULT INDICATOR

The TPR—Test Point Reset Fault Indicator is the most economical fault-indicating solution for elbow test point applications.

RADIORANGER® WIRELESS FAULT INDICATION SYSTEM

Reduce fault-finding time in subsurface vault applications. Communicate subsurface fault-indicator status to street-level personnel. RadioRANGER is also a great solution for pad-mounted enclosures.

REMOTE DISPLAY OPTIONS FOR UNDERGROUND FAULT INDICATORS

Large "L" Display
(BEACON® versions also available)

Standard "V" Display
(BEACON versions also available)

BEACON Bolt® Display

Three-Phase "3" Display
(BEACON versions also available)

GENERAL ENGINEERING SERVICES

COMPLETE ENGINEERING SOLUTIONS

SEL provides cost-effective capabilities and collaborates with partners to provide complete turnkey solutions. Factory-trained and industry-experienced engineers provide the best possible solution for every project.

Project Scope and Specification
From the conceptual phase of a project to execution and commissioning, SEL services range from preliminary designs to equipment parameters in order to complete project estimates.

System Design and Settings Review
Receive a detailed analysis of your power system that will identify ways to take full advantage of technology to reduce equipment and operational costs while increasing system performance, reliability, and functionality.

Engineering Design and Drafting Services
Using computer-assisted design and drafting systems, SEL offers the following services for your electrical power project:

- Complete design and drafting packages
- Staff augmentation
- Bid documents
- Cost estimation
- Engineering studies

Field Testing and Commissioning
Reduce commissioning time and cost by bringing factory-trained SEL technical staff on-site to support testing and commissioning efforts and to provide hands-on training for your personnel.

TRADITIONAL CONSULTING ENGINEERING SERVICES TO MEET YOUR POWER SYSTEM NEEDS

Retrofit Engineering and Implementation
Receive assistance for your retrofit needs. Services include new relay selection, new relay scheme design, drafting modification, relay settings, training, and field services. SEL can also fabricate retrofit doors, wiring harnesses, panels, and control buildings to replace aging infrastructure.

Synchrophasor Systems
Synchrophasors provide a real-time measurement of electrical quantities from across a power system. SEL applies these measurements to validate system models, measure stability margins, maximize stable system loading, and implement remedial action schemes (RAS).

Cybersecurity Services
Cybersecurity services help customers assess, support, and develop control system security infrastructure. Services support North American Electric Reliability Corporation (NERC) Critical Infrastructure Protection (CIP) standards as well as other security standards and regulations. SEL personnel have multidisciplinary experience in substations, control systems, and information security and maintain industry security certifications.

Asset Optimization
Monitor key asset wear information as soon as your SEL protective relay is installed. By collecting, sorting, and storing information before sending it to a system-wide database, substation data tools provide secure, concise, and controlled data to asset and maintenance managers.

TO CONTACT SEL ENGINEERING SERVICES, PLEASE EMAIL INFO@SELENGINEERING.COM.

PROTECTION AND AUTOMATION SERVICES

FEATURED SERVICES AND SOLUTIONS

SEL protection and automation services have been implemented in power systems around the world. Your project will be staffed with engineers who have years of experience and a broad knowledge base, ensuring that you'll get the best solution for your system.

Relay Settings
SEL provides assistance in programming and configuring protection and control equipment using analysis, documentation, and testing for a wide variety of protection and control applications.

Scheme Design
Take full advantage of SEL multifunctional technology for protection and automation schemes. Benefit from the best technology with schematics and diagrams prepared by SEL engineers.

Communications Architecture Design and Programming
SEL engineers build your protection and control systems on sound communications and network architecture design and product configuration.

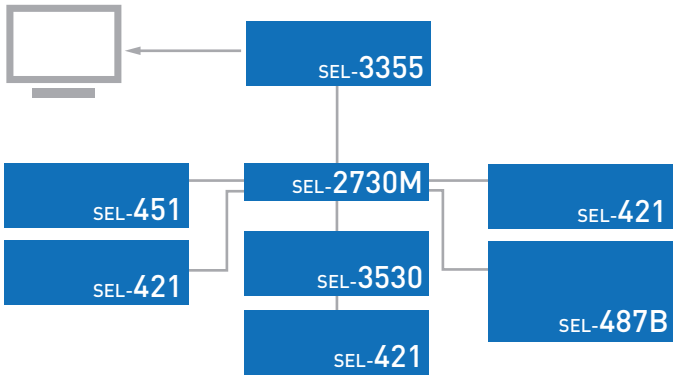

Systems include communications designs to provide protection, control, and automation functions.

SEL engineers understand protection and automation technology, applications, and customer needs. Their in-depth knowledge of the latest technology will provide you with appropriate, reliable, and cost-effective solutions.

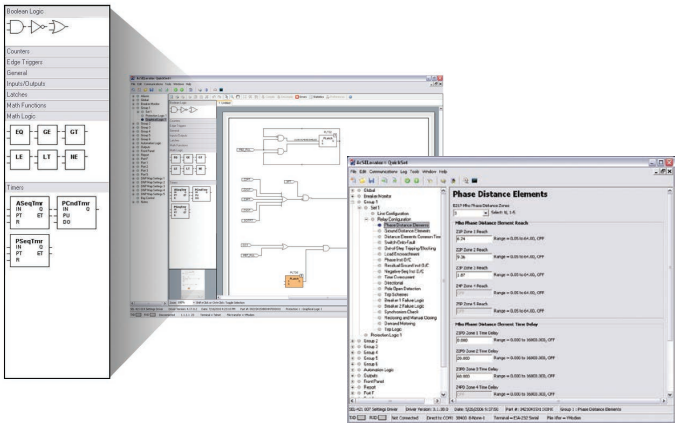

SEL engineers will assist you with relay settings, human-machine interface (HMI) design, and logic.

Project Scope and Specification
SEL experts assist you from the conceptual phase of a project through execution and commissioning. Services range from preliminary designs to complete project estimates.

Fault and Coordination Studies
Maintain reliable system operations using fault (short-circuit), system protection and coordination, and relay application studies.

Model Power System Testing
Improve protection system performance in critical applications. Validate performance by modeling your power system and by testing and optimizing relay operation using electromagnetic transient simulations.

Documentation
Refer to SEL technical documentation to aid the downloading of relay settings, commissioning, application training, historical record keeping, and managing day-to-day operations.

Panels and Assemblies
Request SEL to design, build, assemble, wire, test, package, and ship panels worldwide; receive factory and on-site testing.

Field Testing and Commissioning
Bring factory-trained SEL technical staff on-site to support field testing and commissioning efforts, and to provide hands-on training for personnel.

Training
Learn about products and systems via application-specific training for protection and automation technology, along with SEL University technical courses, to increase the effectiveness of your operations and engineering staff.

MODEL POWER SYSTEM TESTING

SEL can create a computer model of your power system, enabling endless possibilities for testing control systems under realistic conditions. This allows testing on a variety of power system applications and apparatus, including protective relaying schemes, integrated protection and control schemes, general ac and dc system operations and behavior, interaction of ac and dc systems, and control systems for high-voltage dc (HVdc), static VAR compensator (SVC), synchronous machines, and flexible ac transmission system (FACTS) devices.

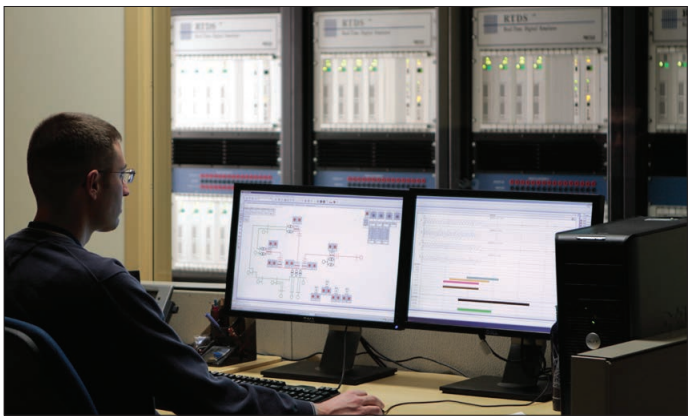

APPLICATIONS

- Series-compensated system coordination
- Remedial action schemes
- Communications-assisted tripping schemes
- Dissimilar relay coordination
- Automatic transfer schemes
- Power management systems
- Distribution network automation

Complex System Design and Implementation

Advanced tools provide realistic, closed-loop, transient, and dynamic simulation of the power system for testing complex systems in a way that accurately reflects real-world experiences. Improve system reliability and reduce costs with real-time transient power system testing.

Performance Evaluation for Complex Systems

Simulate and evaluate, under real-world conditions, alternative protection and control schemes for your power system. A typical simulation of several thousand fault cases can be run in less than one day, providing the equivalent of many years of operating history and allowing you to gain insight into the capabilities and limitations of your system.

Waveform Capture in COMTRADE Files

Capture the transient waveforms generated during each simulation as record files for use in subsequent relay testing, analysis, and commissioning.

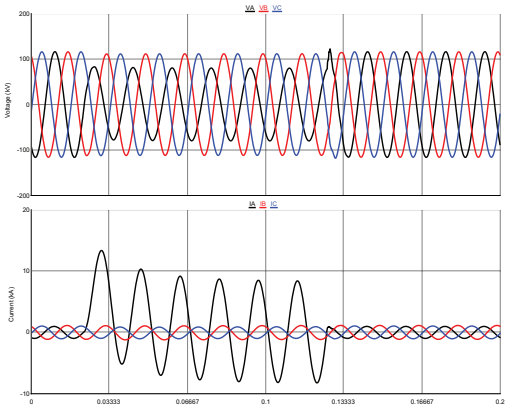

Comprehensive Documentation

The large amount of test data is automatically collected and formatted to allow easy analysis using standard tools, such as Microsoft® Excel®. Detailed reports describe each simulation and include recommendations and/or conclusions from the testing.

ARC-FLASH HAZARD SERVICES

FEATURED SOLUTIONS

SEL conducts flexible, customized arc-flash hazard services to mitigate arc-flash hazard risk and improve employee safety. Using proven methods to calculate flash protection boundaries and to classify each area into proper personal protective equipment (PPE) categories, SEL offers many services to provide complete, cost-effective arc-flash solutions for your facility, including:

- Power system modeling
- Short-circuit studies
- Protective-device coordination studies
- Arc-flash analysis studies
- Arc-flash mitigation studies
- Arc-flash hazard warning plans
- Arc-flash engineering reports
- Field surveys
- Detailed engineering studies

Software Analysis
SEL analyzes and models your power system using industry-standard software to calculate short-circuit current magnitudes, protective device clearing times, and arc-flash energy levels and classifications.

SEL offers the industry's leading arc-flash mitigation solution by using SEL-751/SEL-751A Feeder Protection Relays or SEL-849 Motor Management Relays to combine light-sensing technology with fast overcurrent protection.

Employee Protection and Safety
Protect employees from arcing faults by designing equipment and power systems for safety. Properly establish flash-protection boundaries and post required warnings.

Potential Hazards Identification
Identify and quantify potential arc-flash hazard areas. Determine incident energy levels, identify the correct hazard/risk category, and establish flash protection boundaries.

Regulation Compliance
Address Occupational Safety and Health Administration (OSHA) regulations (29 CFR 1910) and the National Fire Protection Association Standard for Electrical Safety in the Workplace® (NFPA 70E).

POWERMAX® POWER MANAGEMENT AND CONTROL SYSTEM

For customers with on-site generation and/or significant import/export power, the SEL powerMAX Power Management and Control System is the ideal solution. powerMAX contains automated control functions specifically designed to help prevent, detect, and mitigate system blackouts while preserving critical assets.

Control major power system assets for optimal economical operation by using powerMAX automation functions. Collect, manipulate, and present power system data as usable information to enable operators, maintenance personnel, and engineering staff to diagnose system events, predict equipment failures, minimize unnecessary maintenance, and provide high-speed solutions with subcycle round-trip times.

Trusted Technology

The SEL powerMAX System protects against blackouts with advanced, innovative technology that provides protection and control for islanded power systems. powerMAX can be used for oil and petrochemical refining operations, pulp and paper manufacturing facilities, mining and metals processing facilities, water and wastewater treatment plants, data centers, or any other production facility with an islanded, multisource, or distributed generation power system.

Components work together seamlessly to deliver exceptional control system performance and power system reliability.

POWER MANAGEMENT AND CONTROL SYSTEM SOLUTIONS

Generation Control Systems

- System frequency control
- Spinning reserve management
- Voltage control
- VAR control
- Power factor management
- Motor-starting support

Automatic Load-Shedding Systems

- High-speed contingency-based load shedding
- Gradual overload load-shedding system (asset overloads)
- Underfrequency load shedding (levels and rate-of-change-of-frequency)

Other Power Management Systems and Solutions

- Contingency-based generation shedding and runback
- Overfrequency-based generation shedding
- Automatic islanding detection and control
- High-speed decoupling
- Wide-area protection and control
- Automatic load restoration
- System simulators for training and testing
- Automated generator and island synchronization

ARCHITECTURE AND SYSTEM CAPABILITIES

The SEL POWERMAX System is a complete power management and control system. It includes substation-hardened computing platforms, protective relays, power quality monitoring capabilities, revenue metering, serial and Ethernet communications processing platforms, an IEC 61131-3 programming environment, and a fully redundant server-based data acquisition and monitoring system.

Robust, easy-to-use software, available without a license or support fees, substantially reduces system acquisition and maintenance expenses. Control every aspect of your power system with software that includes control and monitoring of intelligent electronic devices (IEDs), digital fault-recording (oscillography) features, fault data analysis capabilities, time synchronization of all IEDs, Sequential Events Recorder (SER) analysis tools, interfacing and outputting data to other systems, protective relay settings management software, and communications system management software.

Communications architecture supports low-latency time-division multiplexing (TDM) and triple-contingency substation-hardened Ethernet switching network topologies. Employ remote virtual private network (VPN) administrative access, two-level access passwords, and robust SecureDoc Enterprise Server (SES) encryption algorithms. Since 1984, SEL has designed security into our products, ensuring the safe, secure, and reliable operation of the power system.

CUSTOM PANEL SOLUTIONS

SEL PANEL AND SYSTEM MANUFACTURING ADHERES TO STRICT QUALITY CONTROLS FOR DESIGN, MANUFACTURING, TESTING, AND COMMISSIONING.

SEL designs, manufactures, tests, and delivers custom protection, control, and metering panels as well as control cabinets and retrofit doors. SEL panels are supported by an unmatched warranty and extraordinary customer service. Panels, cabinets, and doors are built to match customer specifications and needs.

SEL tests the final implementation of every manufactured system before shipping, reducing overall project costs and engineering time. SEL's testing contributes to easier and faster commissioning.

Complete Panel Solutions

- Consulting and engineering design
- Panel manufacturing and testing
- Protection, automation, and control equipment manufacturing
- Field service

GSA Schedule
Contract: GS-07F-0123N

This SEL product is GSA approved. Contact your sales representative for pricing and delivery options.

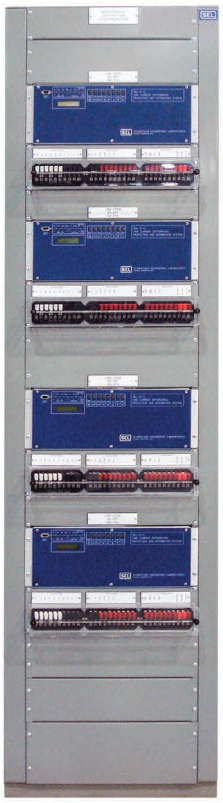

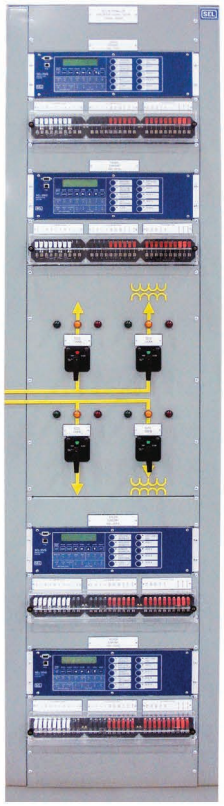

POWERCORE® SUBSTATION CONTROL ENCLOSURE

KEY FEATURES

With the ever-increasing demand for high-quality, reliable power, there is a need for innovative solutions to meet new challenges. Outsourcing any substation project to multiple contractors can be costly and time consuming—and can build unnecessary complexity into a system.

The SEL powerCORE Substation Control Enclosure meets this challenge by providing a complete, turnkey solution that offers the fastest turnaround from design to installation and efficiently integrates the latest technology for protection, automation, control, communications, metering, and information management.

Because SEL is committed to quality and believes that complicated problems can be solved with simple solutions, the powerCORE leads the industry in reliability, efficiency, and price.

SEL builds every powerCORE in our state-of-the-art manufacturing facility, where we put these enclosures through rigorous testing. This gives us the flexibility to modify standard enclosure features to meet specific customer needs.

Quality and Warranty
At SEL, quality comes first. The highest technical standards and best procedures guide our design and manufacture of enclosures, control panels, devices, and other technologies. SEL powerCORE Enclosures are ASTM E331 certified for water penetration with panels joined by a polyurethane sealant and with a PVC roof membrane. Hot-dipped galvanized steel prevents corrosion, and structural insulating panels (SIPs) ensure energy efficiency. SEL backs our commitment to quality with a ten-year, no-questions-asked, worldwide warranty that covers the structural and finish integrity, control panels, and SEL devices included in each powerCORE. And, for increased safety, we are providing customers the option of requesting enclosure walls with a two-hour fired rating.

Reduced Total Ownership Costs
- Integrated engineering design
- Field-expandable design
- Turnkey system solution
- Efficient implementation of technology
- Reduced field wiring and commissioning
- Low maintenance
- Reduced lead times
- Advanced testing
- High reliability and quality
- Ten-year, worldwide warranty

Simplified Panels
SEL multifunctional protective relays minimize the number of devices needed and simplify wiring.

Improved System Reliability
The use of SEL protection, monitoring, and communications equipment coupled with equipment diagnostics information improves system reliability and enables condition-based control of substation equipment.

Prewired and Factory-Tested
Reduce field wiring and commissioning time and expense. A substation simulator tests protection and automation functions; wiring is complete and tested to the terminal blocks in the yard termination cabinet.

Adaptable Design
SEL can accommodate customer preferences for equipment and design details, such as substation control enclosure layout, battery system, protective relays, panel layout and wiring practices, and communications equipment.

On-Site Delivery and Offloading
The substation control enclosure is delivered directly to the job site or warehouse. SEL can arrange offloading by crane.

Customer-Specific HMI
Flexible HMI design allows quick integration of controls and displays of analog data, status, and alarms. Optional functionality can include tagging, online documentation, historical trended data, and much more.

ORDER SEL PRODUCTS WORLDWIDE

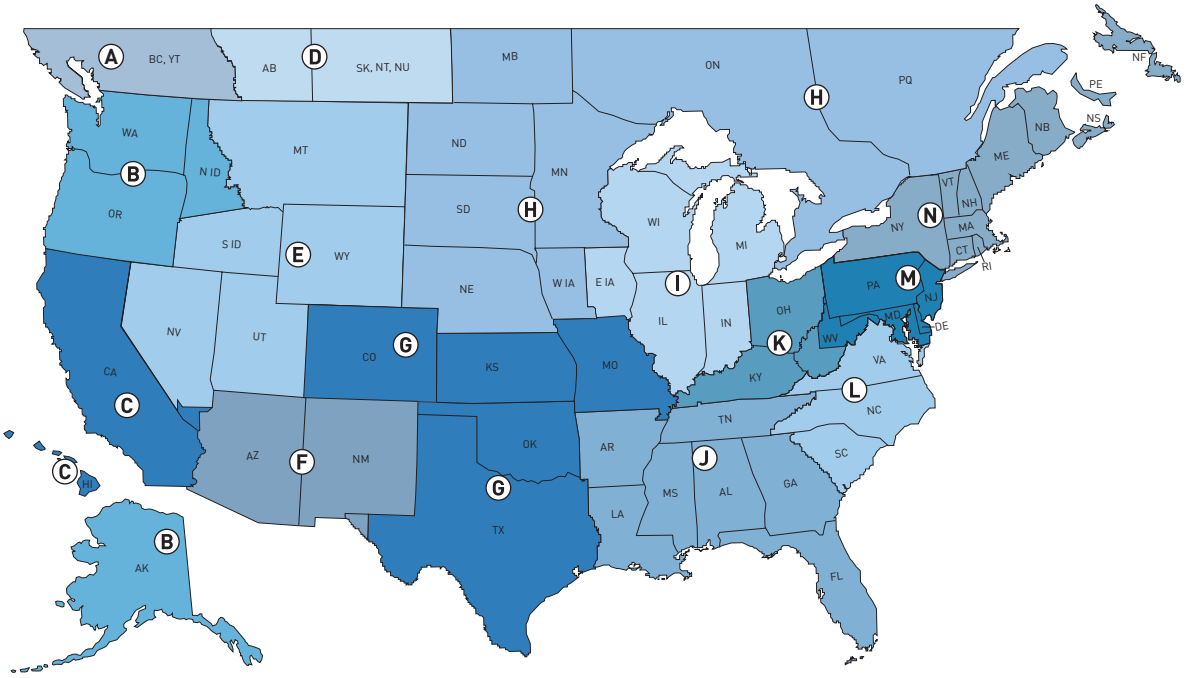

NATIONAL

A **British Columbia Territory**
Tel: +1.604.297.3020
Fax: +1.604.297.3029
bc@selinc.com
www.selinc.com/support

B **PEAK Measure, Inc.**
Tel: +1.360.263.0123
Fax: +1.360.263.0124
sales@peakmeasure.com
www.peakmeasure.com

C **Matzinger-Keegan, Inc.**
Tel: +1.949.852.1006
Fax: +1.949.852.1446
sales@mkireps.com
www.mkireps.com

D **PowerNet Measurement & Control, Ltd.**
Tel: +1.403.571.4735
Fax: +1.403.571.4736
sales@powernet-mcl.com
www.powernet-mcl.com

E **Rocky Mountain Territory**
Tel: +1.509.336.2666
Fax: +1.509.336.2667
rockymtn@selinc.com
www.selinc.com/support

F **Arizona Sun Sales, Inc.**
Tel: +1.602.437.0469
Fax: +1.602.437.0485
sales@arizonasunsales.com
www.arizonasunsales.com

G **KD Johnson, Inc.**
Tel: +1.903.587.3373
Fax: +1.903.587.2509
info@kdjinc.com
www.kdjinc.com

H **Pro-Tech Power Sales, Inc.**
Tel: +1.651.633.0573
Fax: +1.651.633.0610
sales@pro-techpower.com
www.pro-techpower.com

I **A Star Electric Co.**
Tel: +1.847.439.4122
Fax: +1.847.439.4631
support@astareg.com
www.astareg.com

J **Power Connections, Inc.**
Tel: +1.334.702.6650
Fax: +1.334.702.0051
info@powerconnections.com
www.powerconnections.com

K **Utility & Industrial Products, Inc.**
Tel: +1.888.520.6231
Fax: +1.866.862.3790
sales@uandiproducts.com
www.uandiproducts.com

L **Atlantic Power Sales, LLC**
Tel: +1.704.812.8694
Fax: +1.704.754.4146
sales@atlanticpowersales.com
www.atlanticpowersales.com

M **Robinson Sales, Inc.**
Tel: +1.610.430.8850
Fax: +1.610.431.2855
terry.robinson@robinsonsales.com
www.robinsonsales.com

N **Robinson Sales, Inc.**
Tel: +1.802.463.9621
Fax: +1.802.463.1413
laurie.noyes@robinsonsales.com
www.robinsonsales.com

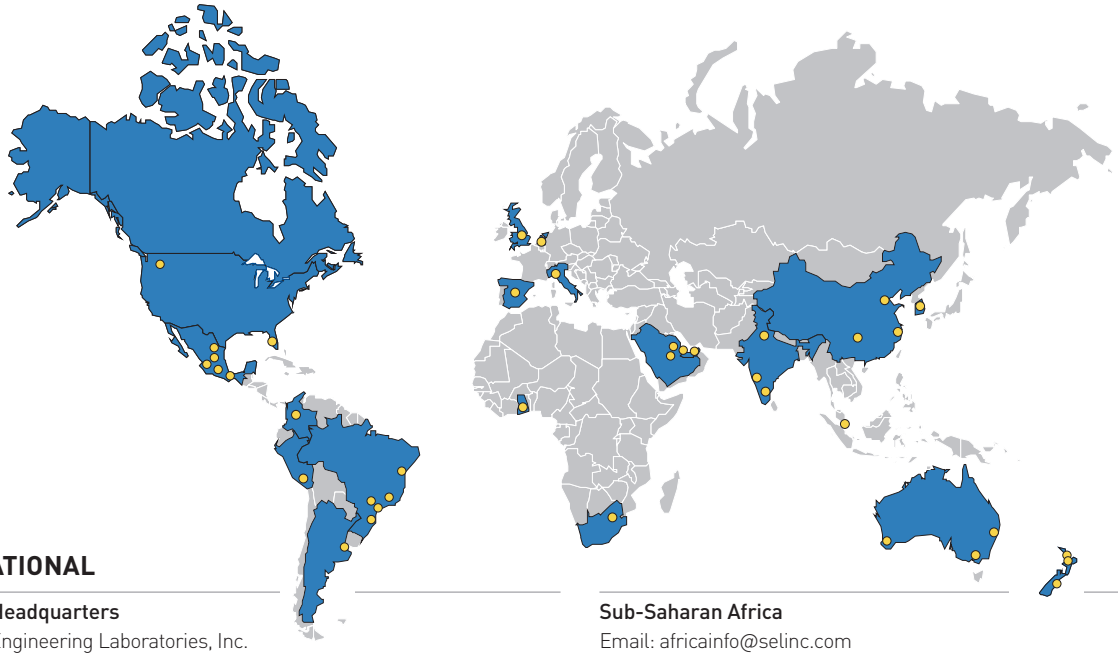

INTERNATIONAL

Corporate Headquarters
Schweitzer Engineering Laboratories, Inc.
2350 NE Hopkins Court
Pullman, WA 99163, USA
Email: internationalinfo@selinc.com
Tel: +1.509.332.1890 · Fax: +1.509.332.7990

Latin America, Spain, and Portugal
Email: latinamericainfo@selinc.com
Trinity, FL, USA · Tel: +1.727.494.6000 · Fax: +1.727.372.8241
Buenos Aires, Argentina · Tel: +54.11.4765.2146
Bogotá, Colombia · Tel: +57.1.638.6313 · Fax: +57.1.616.3030
Lima, Peru · Tel: +51.1.447.7753 · Fax: +51.1.447.7831
Madrid, Spain · Tel: +34.910.165.051 · Fax: +34.910.165.051

Mexico
Email: mexicoinfo@selinc.com
San Luis Potosí · Tel: +52.444.804.2100 · Fax: +52.444.804.2101
Mexico D.F. · Tel: +52.55.9171.8900 · Fax: +52.55.5351.9675
Monterrey · Tel: +52.818.625.2550 · Fax: +52.818.625.2551
Villahermosa · Tel: +52.993.357.5013 · Fax: +52.993.351.3173
Guadalajara · Tel: +52.33.3682.9082 · Fax: +52.33.3682.9078

Brazil
Email: brazilinfo@selinc.com
Campinas · Tel: +55.19.3515.2000 · Fax: +55.19.3515.2011
São Paulo · Tel: +55.11.3045.1712
Curitiba · Tel: +55.41.3075.4300 · Fax: +55.41.3075.4309
Salvador · Tel: +55.71.3016.6464
Belo Horizonte · Tel: +55.31.3347.8128 · Fax: +55.31.3347.8128

Northern Europe and Eurasia
Email: northerneuropeinfo@selinc.com · ukinfo@selinc.com
Stafford, U.K. · Tel: +44.178.524.9876 · Fax: +44.178.525.6200
Eindhoven, Netherlands · Tel: +31.40.258.1188 · Fax: +31.40.258.1180

Southern Europe and North Africa
Email: southerneuropeinfo@selinc.com
Milan, Italy · Tel: +39.02.4548.3116 · Fax: +39.02.4947.0980

Sub-Saharan Africa
Email: africainfo@selinc.com
Centurion, South Africa · Tel: +27.12.664.5930 · Fax: +27.12.87.234.9234
Accra, Ghana · Tel: +233.209.985.097 · Fax: +2712.644.0900

Middle East
Email: middleeastinfo@selinc.com
Manama, Bahrain · Tel: +973.17.587077 · Fax: +973.17.587078
Dubai, UAE · Tel: +971.44.201.021 · Fax: +971.44.201.030

Saudi Arabia
Email: saudiarabiainfo@selinc.com
Khobar · Tel: +966.13.821.8900 · Fax: +966.13.830.6403
Riyadh · Tel: +966.11.263.2044 · Fax: +966.1.263.1082

Indian Subcontinent
Email: indiainfo@selinc.com
Delhi · Tel: +91.11.4520.5500 · Fax: +91.11.4520.5501
Bangalore · Tel: +91.80.2318.3568
Mumbai · Tel: +91.22.2536.3736 · Fax: +91.22.2536.3736

China and Taiwan
Email: eastasiainfo@selinc.com
Shanghai, China · Tel: +86.21.3393.3788 · Fax: +86.21.3393.3799
Beijing, China · Tel: +86.10.8476.3360 · Fax: +86.10.8476.3360
Chengdu, China · Tel: +86.28.8529.3296 · Fax: +86.138.0806.2487

Southeast Asia
Email: southeastasiainfo@selinc.com
Perth, Australia · Tel: +61.8.9201.6800 · Fax: +61.8.9444.6161
Singapore · Tel: +65.3157.1249 · Fax: +65.6532.0198
Seoul, South Korea · Tel: +82.2.6001.3140 · Fax: +82.2.6001.3712

Oceania
Email: oceaniainfo@selinc.com · australiainfo@selinc.com
Melbourne, Australia · Tel: +61.3.9485.0700 · Fax: +61.3.9480.6560
Brisbane, Australia · Tel: +61.7.3806.3358 · Fax: +61.7.3209.8962
Perth, Australia · Tel: +61.8.9201.6800 · Fax: +61.8.9444.6161
Christchurch, New Zealand · Tel: +64.3.357.1427 · Fax: +64.3.312.0179
Auckland, New Zealand · Tel: +64.9.522.4392 · Fax: +64.3.312.0179
Hamilton, New Zealand · Tel: +64.7.855.5946

MAKING ELECTRIC POWER SAFER, MORE RELIABLE, AND MORE ECONOMICAL

SCHWEITZER ENGINEERING LABORATORIES, INC.

Tel: +1.509.332.1890
Email: ibd@selinc.com
Web: www.selinc.com/industrial

385-0011 • 20140811

CONTACT SEL TODAY!